contract for sale of land or strata title by offer and acceptance

REIWA
REAL ESTATE INSTITUTE OF WESTERN AUSTRALIA
APPROVED BY THE REAL ESTATE INSTITUTE OF WESTERN AUSTRALIA (INC.)
COPYRIGHT © REIWA 2025
FOR USE BY REIWA MEMBERS
000011216488
firstnational Genesis

NOTICE: Contracts must be lodged with the Office of State Revenue for duty assessment within two (2) months of the date the last person executes the Contract
WARNING - If the Buyer is not an Australian Citizen or Permanent Resident or a New Zealand Citizen then FIRB approval (and a special condition to this Contract) may be required and additional Duty will be payable. Any non Australian resident will need to give the ATO notice of their purchase within 30 days after settlement.
WARNING - A Withholding Amount **may** apply to this Contract (see 2022 General Condition 3.7).
WARNING - If GST is relevant to this transaction then the relevant GST provision should be outlined in the Special Conditions or in an attached GST Annexure, which forms part of this Contract.

TO: BJK Genesis Property Pty Ltd
Address 6/160 Scarborough Beach Road
Suburb Mount Hawthorn State WA Postcode 6016
As Agent for the Seller / ~~Buyer~~

THE BUYER
Name
Address
Suburb State Postcode
Name
Address
Suburb State Postcode
EMAIL: The Buyer consents to Notices being served at:

OFFERS TO PURCHASE the Land and Property Chattels set out in the Schedule ("Property") with vacant possession unless stated otherwise in the Special Conditions at the Purchase Price on the terms set out in the Schedule, the Conditions and Special Conditions as:

☐ Sole owner ☐ Joint Tenants ☐ Tenants in Common specify the undivided shares

SCHEDULE

The **Property** at:
Address 308 7/11 Heirisson Way
Suburb Victoria Park State WA Postcode 6100
Lot 47 ~~Deposited/Survey~~/Strata/~~Diagram~~/Plan 33257 Whole / ~~Part~~ Vol 2112 Folio 647
A **deposit** of $ of which $ 0 is paid now and $ to be paid within 7 days of acceptance
to be held by First National Real Estate Genesis
("the Deposit Holder"). The balance of the Purchase Price to be paid on the Settlement Date.

Purchase Price
Settlement Date
Property Chattels including All fixed floor coverings, light fittings, window treatments and all pool equipment as inspected and where applicable.

GST WITHHOLDING

1. Is this Contract concerning the taxable supply of new residential premises or potential residential land as defined in the GST Act? ☐ YES ☑ NO
2. If NO is ticked or no box is ticked (in which case the answer is deemed to be NO), then the Buyer is not required to make a payment under section 14-250 of the Taxation Administration Act 1953 (Cth).
3. If YES is ticked, then the 'GST Withholding Annexure' should be attached to this Contract.

FINANCE CLAUSE IS APPLICABLE

LENDER/
MORTGAGE BROKER (NB. If blank, can be any)
LATEST TIME: 4pm on:
AMOUNT OF LOAN:
SIGNATURE OF BUYER

FINANCE CLAUSE IS NOT APPLICABLE

Signature of the Buyer if Finance Clause IS NOT applicable

NOTE: IF THIS DOCUMENT IS ON SEPARATE PAGES OR IS TO BE FAXED THEN ALL PARTIES SHOULD SIGN ALL PAGES.

REIWA
REAL ESTATE INSTITUTE OF WESTERN AUSTRALIA
APPROVED BY THE REAL ESTATE INSTITUTE OF WESTERN AUSTRALIA (INC.)
COPYRIGHT © REIWA 2025
FOR USE BY REIWA MEMBERS
000011216488
firstnational Genesis

CONDITIONS

1. SUBJECT TO FINANCE

If the Buyer signs the "Finance Clause is not Applicable" box in the Schedule, or if no information is completed in the 'Finance Clause is Applicable' box in the Schedule, then this Clause 1 does not apply to the Contract.

If any information is completed in or the Buyer signs the 'Finance Clause is Applicable' box in the Schedule then this Clause 1 applies to the Contract.

1.1 Buyer's Obligation to Apply for Finance and Give Notice to the Seller

(a) The Buyer must:
  (1) immediately after the Contract Date make a Finance Application to a Lender or a Mortgage Broker using, if required by the Lender, the Property as security; and
  (2) use all best endeavours in good faith to obtain Finance Approval.

(b) If the Buyer does not comply with Clause 1.1(a) or 1.1(c)(1) then the Contract will not come to an end pursuant to clause 1.2 and the Buyer may not terminate the Contract under Clause 1.3. The rights of the Seller under this Clause 1.1 will not be affected if the Buyer does not comply with Clause 1.1.

(c) The Buyer must immediately give to the Seller or Seller Agent:
  (1) an Approval Notice if the Buyer obtains Finance Approval; or
  (2) a Non Approval Notice if the Finance Application is rejected;

at any time while the Contract is in force and effect.

1.2 No Finance Approval by the Latest Time: Non Approval Notice Given

This Contract will come to an end without further action by either Party if on or before the Latest Time:

(a) the Finance Application has been rejected; or

(b) a Non Approval Notice, is given to the Seller or Seller Agent.

1.3 No Finance Approval by the Latest Time: No Notice Given

If by the Latest Time the Seller or Seller Agent has not been given:

(a) an Approval Notice; or

(b) a Non Approval Notice;

then this Contract will be in full force and effect unless and until either the Seller gives written Notice of termination to the Buyer or the Buyer terminates this Contract by giving a Non-Approval Notice to the Seller or Seller Agent.

1.4 Finance Approval: Approval Notice Given

If by the Latest Time, or if Clause 1.5 applies, before the Contract is terminated:

(a) Finance Approval has been obtained; or

(b) an Approval Notice has been given to the Seller or Seller Agent;

then this Clause 1 is satisfied and this Contract is in full force and effect.

1.5 Notice Not Given by Latest Time: Sellers Right to Terminate

If by the Latest Time an Approval Notice or a Non Approval Notice has not been given to the Seller or Seller Agent then at any time until an Approval Notice or a Non Approval Notice is given, the Seller may terminate this Contract by written Notice to the Buyer.

1.6 Buyer Must Keep Seller Informed: Evidence

(a) If requested in writing by the Seller or Seller Agent the Buyer must:
  (1) advise the Seller or Seller Agent of the progress of the Finance Application; and
  (2) provide evidence in writing of:
    (i) the making of a Finance Application in accordance with Clause 1.1 (a) and of any loan offer made, or any rejection; and/or
    (ii) in the case of any Finance Application made to a Mortgage Broker, any "preliminary assessment" of the suitability of the proposed credit contract provided to the Buyer by the Mortgage Broker pursuant to section 116 of the Credit Protection Act; and
  (3) if applicable, advise the Seller or Seller Agent of the reasons for the Buyer not accepting any loan offer.

(b) If the Buyer does not comply with the request within 2 Business Days then the Buyer authorises the Seller or Seller Agent to obtain from the Lender and/or Mortgage Broker the information referred to in Clause 1.6(a).

1.7 Right To Terminate

If a Party has the right to terminate under this Clause 1, then:

(a) termination must be effected by written Notice to the other Party;

(b) Clauses 23 and 24 of the 2022 General Conditions do not apply to the right to terminate;

(c) upon termination the Deposit and any other monies paid by the Buyer must be repaid to the Buyer;

(d) upon termination neither Party will have any action or claim against the other for breach of this Contract, except for a breach of Clause 1.1 by the Buyer.

1.8 Waiver

The Buyer may waive this Clause 1 by giving written Notice to the Seller or Seller Agent at any time before the Latest Time, or if Clause 1.5 applies, before the Contract is terminated. If waived this Clause is deemed satisfied.

1.9 Definitions

In this Clause:

Amount of Loan means the amount referred to in the Schedule, any lesser amount of finance referred to in the Finance Application or any lesser amount of finance acceptable to the Buyer. If the amount referred to in the Schedule is blank, then the amount will be an amount equivalent to the Purchase Price.

Approval Notice means a statement in writing given by the Buyer, a Lender or a Mortgage Broker to the Seller, or Seller Agent to the effect that Finance Approval has been obtained.

Credit Protection Act means the *National Consumer Credit Protection Act, 2009* (Cwth).

Finance Application means an application made by or on behalf of the Buyer:

(a) to a Lender to lend any monies payable under the Contract: or

(b) to a Mortgage Broker to facilitate an application to a Lender.

Finance Approval means a written approval by a Lender of the Finance Application, a written offer to lend or a written notification of an intention to offer to lend made by a Lender:

(a) for the Amount of Loan;

(b) which is unconditional or subject to terms and conditions:
  (1) which are the Lender's usual terms and conditions for finance of a nature similar to that applied for by the Buyer; or
  (2) which the Buyer has accepted by written communication to the Lender, but a condition which is in the sole control of the Buyer to satisfy will be treated as having been accepted for the purposes of this definition; or
  (3) which, if the condition is other than as referred to in paragraphs (1) and (2) above includes:
    (i) an acceptable valuation of any property;
    (ii) attaining a particular loan to value ratio;
    (iii) the sale of another property; or
    (iv) the obtaining of mortgage insurance;

  and has in fact been satisfied.

Latest Time means:

(a) the time and date referred to in the Schedule; or

(b) if no date is nominated in the Schedule, then 4pm on the day falling 15 Business Days after the Contract Date.

Lender means any bank, building society, credit union or other institution which makes loans and in each case carries on business in Australia.

Mortgage Broker means means a holder of an Australian Credit Licence pursuant to section 35 of the Credit Protection Act or a credit representative pursuant to sections 64 or 65 of that legislation.

Non Approval Notice means:

(a) advice in writing given by the Buyer or a Lender to the Seller, or Seller Agent to the effect that the Finance Application has been rejected or Finance Approval has not been obtained; or

(b) advice in writing from a Mortgage Broker to the Seller or Seller Agent to the effect that:
  (1) (i) they have made inquiries about the Buyer's requirements and objectives under this Contract;
    (ii) they have conducted a "preliminary assessment" pursuant to sections 116 and 117 of the Credit Protection Act of the suitability of the credit contract proposed for the Buyer arising from the Finance Application; and
    (iii) they have assessed that proposed credit contract as being unsuitable for the Buyer; or
  (2) the Finance Application to a Lender has been rejected.

2. Acceptance of an offer by one Party to the other Party will be sufficiently communicated by the accepting Party to the other Party if verbal or written notification is given by the accepting Party or their Representative or Real Estate Agent that the accepting Party has signed the Contract.
3. The 2022 General Conditions together with the Annexure of Changes to the 2022 General Conditions Caused by changes to the transfer of Land Act 1893 are incorporated into this Contract so far as they are not varied by or inconsistent with the Conditions or Special Conditions of this Contract.
4. The parties consent to the information in this Contract being used/disclosed by REIWA and the Seller Agent in accordance with the privacy collection notices pursuant to the Australian Privacy Principles that appear on the REIWA and Seller Agent's websites.

SPECIAL CONDITIONS

1.The Buyer is aware that they will be required, prior to settlement, to complete and lodge a Foreign Transfer Duty Declaration which may result in the payment by them of Foreign Transfer Duty which is not included in the purchase price. The buyer acknowledges they have made all necessary enquiries to satisfy themselves about their responsibilities regarding Foreign Transfer Duty.

2. The buyer is aware and accepts the property is currently subject to a Fixed Term Lease until April 16th 2026, at $590 per week rent

REIWA
REAL ESTATE INSTITUTE OF WESTERN AUSTRALIA
APPROVED BY THE REAL ESTATE INSTITUTE OF WESTERN AUSTRALIA (INC.)
COPYRIGHT © REIWA 2025
FOR USE BY REIWA MEMBERS
000011216488
firstnational Genesis

SPECIAL CONDITIONS - Continued

BUYER [If a corporation, then the Buyer executes this Contract pursuant to the Corporations Act.]

Signature	Date	Signature	Date
Signature	Date	Signature	Date

THE SELLER (FULL NAME AND ADDRESS) ACCEPTS the Buyer's offer

Name Raymond Kit Siong Ong
Address 3 Carmichael Road
Suburb Singapore State Postcode 359786

Name Siew Jong Foo
Address 3 Carmichael Road
Suburb Singapore State Postcode 359786

EMAIL: The Seller consents to Notices being served at:

[If a corporation, then the Seller executes this Contract pursuant to the Corporations Act.]

Signature	Date	Signature	Date
Signature	Date	Signature	Date

RECEIPT OF DOCUMENTS
The Buyer acknowledges receipt of the following documents:
1. This offer and acceptance
2. Strata disclosure & attachments (if strata)
3. 2022 General Conditions
4. Certificate of Title
5. Annexure of changes to General Conditions (form 198)

Signature Signature

RECEIPT OF DOCUMENTS
The Seller acknowledges receipt of the following documents:
1. This offer and acceptance
2. 2022 General Conditions
3. Annexure of changes to General Conditions (form 198)

Signature Signature

CONVEYANCER (Legal Practitioner/Settlement Agent)
The Parties appoint their Representative below to act on their behalf and consent to Notices being served on that Representative's email address.

	BUYER'S REPRESENTATIVE	SELLER'S REPRESENTATIVE
Name		
Signature		

COPYRIGHT
The copyright of this Contract by Offer and Acceptance is the property of the Real Estate Institute of Western Australia (Inc.) ("REIWA") and neither the form nor any part of it may be used or reproduced by any method whatsoever or incorporated by reference or in any manner whatsoever in any other document without the consent of the REIWA. 01/25

APPROVED BY
THE REAL ESTATE INSTITUTE
OF WESTERN AUSTRALIA (INC.)
COPYRIGHT © REIWA 2023
FOR USE BY REIWA MEMBERS
000011216488

ANNEXURE OF CHANGES TO THE 2022 GENERAL CONDITIONS CAUSED BY CHANGES TO THE TRANSFER OF LAND ACT 1893

LANDGATE WILL NOT ISSUE, OR REQUIRE DUPLICATE CERTIFICATES OF TITLE FOR LAND TO BE PRODUCED, FROM THE 7TH AUGUST 2023, CONSEQUENTLY THE PARTIES AGREE TO VARY THE 2022 GENERAL CONDITIONS IN THE FOLLOWING MANNER:

	CONDITION	**CHANGES**
1.	3.10(a)	Delete subclause (1).
2.	3.11	Delete clause 3.11.
3.	26.1 definition of "*Duplicate Certificate of Title*"	Delete the definition of *"Duplicate Certificate of Title".*

Buyer

Signature _____

Name _____

Date _____

Signature _____

Name _____

Date _____

Signature _____

Name _____

Date _____

Signature _____

Name _____

Date _____

Seller

Signature _____

Name Raymond Kit Siong Ong

Date _____

Signature _____

Name Siew Jong Foo

Date _____

Signature _____

Name _____

Date _____

Signature _____

Name _____

Date _____

AUSTRALIAN STANDARD PRE-PURCHASE INSPECTION FOR MAJOR STRUCTURAL DEFECTS

REIWA
REAL ESTATE INSTITUTE OF WESTERN AUSTRALIA
APPROVED BY THE REAL ESTATE INSTITUTE OF WESTERN AUSTRALIA (INC.)
COPYRIGHT © REIWA 2024
FOR USE BY REIWA MEMBERS
000010996822
firstnational Genesis

ANNEXURE A

This annexure forms part of the Contract for the Sale of Land or Strata Title for the Property at

308 7/11 Heirisson Way, Victoria Park WA 6100

NOTE - THIS ANNEXURE ONLY APPLIES TO, AND IS LIMITED TO, MAJOR STRUCTURAL DEFECTS PURSUANT TO APPENDIX "A" OF THE STANDARD AND NOT OTHER DEFECTS, MAINTENANCE OR OTHER SAFETY ISSUES.

1. The Buyer may at their expense obtain a written Report on any Major Structural Defects of the residential building and of the following described areas Located upon the Property ("**Building**"). If nothing is completed in the blank space then the Building will be the residential Building only.

2. The Buyer must serve a copy of the Report on the Seller, Seller Agent or Seller Representative by 4PM on: *complete (a) or (b)

(a*) ____/____/____ **OR** (b*) 14 days after acceptance ("Date")

3. If the Buyer, and Seller Agent or Seller or Seller Representative do not receive the Report before the Date then the Buyer will be deemed to have waived the benefit of this Annexure. Time is of the essence.
4. If the Report identifies Major Structural Defects to the Property's Building, the Buyer may at any time but no later than three (3) Business Days after the Date serve a Major Structural Defects Notice on the Seller, Seller Agent or Seller Representative giving the Seller five (5) Business Days to agree to remedy the Major Structural Defects.
5. If the Seller elects in writing to remedy the Major Structural Defects in the Major Structural Defects Notice then the Settlement Date will be delayed until the later of: (a) three (3) Business Days after the Seller's Work is completed as certified by the Seller's Builder and (b) the Settlement Date.
6. The Seller must do the Work expeditiously and in good and workmanlike manner through a Builder and provide evidence to the Buyer of completion of the Work.
7. If, prior to the Seller commencing Work, the Seller and Buyer wish to agree and do agree an amount to be paid by the Seller to the Buyer then the amount will be deducted from the Purchase Price at Settlement and the Seller will not undertake the Work.
8. If the Seller does not agree in writing to remedy Major Structural Defects within five (5) Business Days from when the Major Structural Defects Notice was served on the Seller, Seller Agent or Seller Representative then:
   (a) At any time within a further Five (5) Business Days after (1) that period ending (if no notice is given by the seller); or (2) the date notice in writing is given by the Seller to the Buyer, the Buyer may give notice in writing to the Seller, Seller Agent or Seller Representative terminating the Contract and the Deposit and other monies paid will be repaid to the Buyer;
   (b) if the Buyer does not terminate the Contract pursuant to this clause 8, then this Annexure ceases to apply and the Contract continues unaffected by this Annexure.
9. In this Annexure:

9.1 "Builder" means a registered building service contractor (as defined in the *Building Services (Registration) Act 2011*WA) qualified to remedy the matters set out in the Major Structural Defects Notice.

9.2 "Consultant" means an independent inspector qualified and experienced in undertaking pre-purchase property inspections to ascertain Major Structual Defects.

9.3 "Date" means the date inserted or calculated in clause 2. If nothing is inserted in clause 2 then the Date will be five (5) Business Days from the later of (i) the Contract Date; or (ii) the Latest Time for Financial Approval (if any).

9.4 "Major Structural Defects" means a fault or deviation from the intended structural performance of a building element and is a major defect to the building structure of sufficient magnitude where rectification has to be carried out in order to avoid unsafe conditions, loss of utility, or further deterioration of the building structure. Major Structural Defects does not include any non-structural element, e.g., roof plumbing and roof covering, general gas, water and sanitary plumbing, electrical wiring, partition walls, cabinetry, windows, doors, trims, fencing, minor structures, non-structural damp issues, ceiling linings, floor coverings, decorative finishes such as plastering, painting, tiling etc., general maintenance, or spalling of masonry, fretting of mortar or rusting of primary structural elements.

9.5 "Major Structural Defects Notice" means a Notice in writing from the Buyer to the Seller to provide the Seller with the opportunity to agree to rectify the Major Structural Defects that the Buyer requires to be rectified.

9.6 "Report" means the report performed in accordance with Appendix A of the Standard by a ~~Consultant~~ Registered Builder. It is not a special purpose report, nor an all-encompassing report dealing with every aspect of the Property. The Report should only be a reasonable attempt to identify Major Structural Defects to the Building structure pursuant to Appendix "A of the Standard. The presence of defects will only be relevant in this Annexure when the defects are a Major Structural Defect.

9.7 "Standard" means Australian Standard AS 4349-2007 (as amended from time to time) Inspections of buildings Part 1: Pre-purchase Structural Inspection - Residential buildings).

9.8 "Work" means the work required to rectify the Major Structural Defects set out in the Major Structural Defects Notice.

9.9 Words not defined in this Annexure have the same meaning as defined in the Standard or the 2022 General Conditions.

BUYER SIGNATURE	BUYER SIGNATURE	SELLER SIGNATURE	SELLER SIGNATURE

BUYER SIGNATURE	BUYER SIGNATURE	SELLER SIGNATURE	SELLER SIGNATURE

AUSTRALIAN STANDARD PRE-PURCHASE INSPECTION FOR TIMBER PESTS

REIWA
REAL ESTATE INSTITUTE OF WESTERN AUSTRALIA
APPROVED BY THE REAL ESTATE INSTITUTE OF WESTERN AUSTRALIA (INC.)
COPYRIGHT © REIWA 2022
FOR USE BY REIWA MEMBERS
000010996841
firstnational Genesis

ANNEXURE B

This annexure forms part of the Contract for the Sale of Land or Strata Title for the Property at

308 7/11 Heirisson Way, Victoria Park WA 6100

1. The Buyer may at their expense obtain a non-invasive written Report on any Timber Pest Activity or Damage of the residential building and of the following described areas Located upon the Property ("**Building**"). If nothing is completed in the blank space then the Building will be the residential Building only.

   This Annexure does not apply to: (a) any Activity or Damage outside the Building; (b) any comments in the Report about conditions conducive to or susceptibility to Timber Pests; or (c) recommendations for further investigations.

2. The Buyer must serve a copy of the Report on the Seller, Seller Agent or Seller Representative by 4PM on: *complete (a) or (b)

   (a*) ____/____/____ **OR** (b*) 14 days after acceptance ("Date")

3. If the Buyer, and Seller, Seller Agent or Seller Representative do not receive the Report before the Date then the Buyer will be deemed to have waived the benefit of this Annexure. Time is of the essence.
4. If the Report identifies Activity on, or Damage to, the Building, the Buyer may at any time within three (3) Business Days after the Date serve a Timber Pest Notice on the Seller, Seller Agent or Seller Representative giving the Seller Five (5) Business Days to agree to Eradicate and/or Repair.
5. If the Seller elects in writing to Eradicate and/or Repair pursuant to the Timber Pest Notice then the Settlement Date will be delayed until the later of: (a) three (3) Business Days after the Seller's Work is completed as certified by, the Seller's Builder in relation to Repair or a Consultant in relation to Eradication or, the later of them if both are required and (b) the Settlement Date.
6. The Seller must do the Work expeditiously and in a good and workmanlike manner through (a) a Builder to Repair or (b) a Consultant to Eradicate, and provide evidence to the Buyer of completion of the Work.
7. If, prior to the Seller commencing the Work, the Seller and Buyer wish to agree and do agree an amount to be paid by the Seller to the Buyer then that amount will be deducted from the Purchase Price at Settlement and the Seller will not undertake the Work.
8. If the Seller does not agree in writing to Eradicate and/or Repair within Five (5) Business Days from when the Timber Pest Notice was served on the Seller, Seller Agent or Seller Representative then
   (a) At any time within a further Five (5) Business Days after (1) that period ending (if no notice is given by the seller); or (2) the date notice in writing is given by the Seller to the Buyer, the Buyer may give notice in writing to the Seller, Seller Agent or Seller Representative terminating the Contract and the Deposit and other monies paid will be repaid to the Buyer;
   (b) if the Buyer does not terminate the Contract pursuant to this clause 8, then this Annexure ceases to apply and the Contract continues unaffected by this Annexure.
9. In this Annexure:

9.1 "Activity" means evidence of the presence of current Timber Pests.

9.2 "Builder" means a registered building service contractor (as defined in the *Building Services (Registration) Act 2011* WA) qualified to remedy the matters set out in the Major Structural Defects Notice.

9.3 "Consultant" means an independent inspector qualified and experienced in undertaking, pre-purchase property inspections pursuant to the Standard and Eradication.

9.4 "Damage" means evidence of damage caused by Timber Pests to the Building.

9.5 "Date" means the date inserted or calculated in clause 2. If no date is inserted in clause 2 then the Date will be Five (5) Business Days from the later of: (i) the Contract Date; or (ii) the Latest Time for Finance Approval (if any).

9.6 "Eradicate" and "Eradication" mean the treatment necessary to eradicate Activity affecting the Building.

9.7 "Repair" means the Work necessary to repair any Damage.

9.8 "Report" means a report performed in accordance with the Standard by a Consultant at the Property.

9.9 "Standard" means Australian Standard AS 4349.3-2010 (as amended from time to time) Inspection of buildings Timber Pest Inspections.

9.10 "Timber Pests" means subterranean and dampwood termites, borers of seasoned timber and wood decay fungi as defined in the Standard.

9.11 "Timber Pest Notice" means a Notice in writing from the Buyer to the Seller to provide the Seller with the opportunity to agree to Eradicate and/or Repair that the Buyer requires pursuant to the Report.

9.12 "Work" means the work required to Repair pursuant to the Timber Pest Notice.

9.13 Words not defined in this Annexure have the same meaning as defined in the Standard or the 2022 General Conditions.

BUYER SIGNATURE	BUYER SIGNATURE	SELLER SIGNATURE	SELLER SIGNATURE

BUYER SIGNATURE	BUYER SIGNATURE	SELLER SIGNATURE	SELLER SIGNATURE

WESTERN AUSTRALIA

TITLE NUMBER	
Volume	Folio
2112	**647**

RECORD OF CERTIFICATE OF TITLE

UNDER THE TRANSFER OF LAND ACT 1893 AND THE

STRATA TITLES ACT OF 1985

The person described in the first schedule is the registered proprietor of an estate in fee simple in the land described below subject to the reservations, conditions and depth limit contained in the original grant (if a grant issued) and to the limitations, interests, encumbrances and notifications shown in the second schedule.

BGRoberts

REGISTRAR OF TITLES

REGISTRAR OF TITLES WESTERN AUSTRALIA

LAND DESCRIPTION:

LOT 47 ON STRATA PLAN 33257
TOGETHER WITH A SHARE IN COMMON PROPERTY (IF ANY) AS SET OUT ON THE STRATA PLAN

REGISTERED PROPRIETOR:
(FIRST SCHEDULE)

SIEW JONG FOO
RAYMOND KIT SIONG ONG
BOTH OF 3 CARMICHAEL ROAD, SINGAPORE 359786
AS JOINT TENANTS

(T K207286) REGISTERED 28/5/2007

LIMITATIONS, INTERESTS, ENCUMBRANCES AND NOTIFICATIONS:
(SECOND SCHEDULE)

1. INTERESTS NOTIFIED ON THE STRATA PLAN AND ANY AMENDMENTS TO LOTS OR COMMON PROPERTY NOTIFIED THEREON BY VIRTUE OF THE PROVISIONS OF THE STRATA TITLES ACT OF 1985 AS AMENDED.

Warning: A current search of the sketch of the land should be obtained where detail of position, dimensions or area of the lot is required.

----------END OF CERTIFICATE OF TITLE----------

STATEMENTS:

The statements set out below are not intended to be nor should they be relied on as substitutes for inspection of the land and the relevant documents or for local government, legal, surveying or other professional advice.

SKETCH OF LAND:	SP33257
PREVIOUS TITLE:	SP33257
PROPERTY STREET ADDRESS:	BURSWOOD GARDENS, APARTMENT 308, LEVEL 2 7-11 HEIRISSON WAY, VICTORIA PARK.
LOCAL GOVERNMENT AUTHORITY:	TOWN OF VICTORIA PARK

LANDGATE COPY OF ORIGINAL NOT TO SCALE 29/08/2025 12:06 PM Request number: 68687691

Landgate
www.landgate.wa.gov.au

Precontractual Disclosure Statement to the Buyer

Part A | General Information about strata titles schemes

What you need to know

This information applies to a lot in a strata scheme or survey-strata scheme (scheme), which is subject to the *Strata Titles Act 1985* (the Act). Section 156 of the Act sets out that the seller of a strata lot or survey-strata lot (lot) must give the buyer certain information before the buyer signs the contract of sale.

Instruction for the seller

The seller must give the information incorporated in this document to a buyer before the buyer signs a contract for the sale and purchase of a lot in a scheme. Failure to do so may give the buyer the right to avoid the contract and/or delay the proposed settlement date.

Information for the buyer

The buyer should keep this document including any attachments in a safe place as it contains important information which might be needed at a later date.

It is strongly recommended that the buyer read all the information provided by the seller before signing the contract. The buyer should consider obtaining independent professional legal advice before signing the contract.

There are different rights, restrictions and obligations that apply in relation to a lot in a scheme than those that apply to a 'green title' lot. Those rights, restrictions and obligations can be found in the Act, the *Strata Titles (General) Regulations 2019* (regulations), scheme by-laws, the certificate of title, the strata / survey-strata plan for the lot and, if the scheme is a leasehold scheme, the strata lease for the lot. Your right to deal with the lot and to use the common property is restricted by these, as well as by any resolutions and decisions made by the strata company. You will not be able to build on the lot or make any alterations to (including removal of) a building on the lot without the approval of the strata company, except in certain circumstances.

As an owner of a lot, you will also have a share in any common property in the scheme. You will be a member of the strata company, along with all of the other lot owners, and have a right to participate in managing the scheme.

Each lot owner has to abide by the rules of the strata company, known as by-laws. By-laws can be different for each strata scheme and you should understand which by-laws apply to your scheme. The seller must give you the current by-laws before you sign the contract for sale. A strata company can make, amend or repeal by-laws by voting on them, and registering them with the Registrar of Titles at Landgate within 3 months.

As the owner of a lot, you will be liable to pay a strata levy or contribution to the strata company for expenses including for maintenance, repair and insurance of the common property unless the lot is in a scheme of 2 to 5 lots which may be exempt from these requirements. Be aware that if the unpaid amounts for the lot are not paid by the seller before you complete the purchase (settle), you as the new owner will have to pay the strata company these unpaid amounts.

As part of this disclosure you must receive the strata or survey-strata plan (the plan) which includes the lot you are proposing to buy. This plan will show all of the lots and the common property in the scheme. The common property is all the land within the scheme boundary that is not a lot. In a strata plan each lot is clearly identified, but the common property is not; it is everything that is not a lot. In comparison, in a survey-strata plan common property areas are clearly identified as common property. It is important to understand what is your lot, as you will be responsible for repairing and maintaining it, whereas the strata company will generally be responsible for the common property, unless there are by-laws which set out something different.

A buyer may consider seeking more information about the lot, the strata company and the strata / survey-strata scheme by asking the seller to provide it, or by making an application to the strata company for more information under section 107 of the Act.

The buyer should consider reading Landgate's publication *A Guide to Strata Titles* as this provides extra information about schemes.

Buyer's avoidance and other rights

Avoidance for failure to give precontractual information to the buyer

The buyer's right to avoid the contract for precontractual information is as follows:

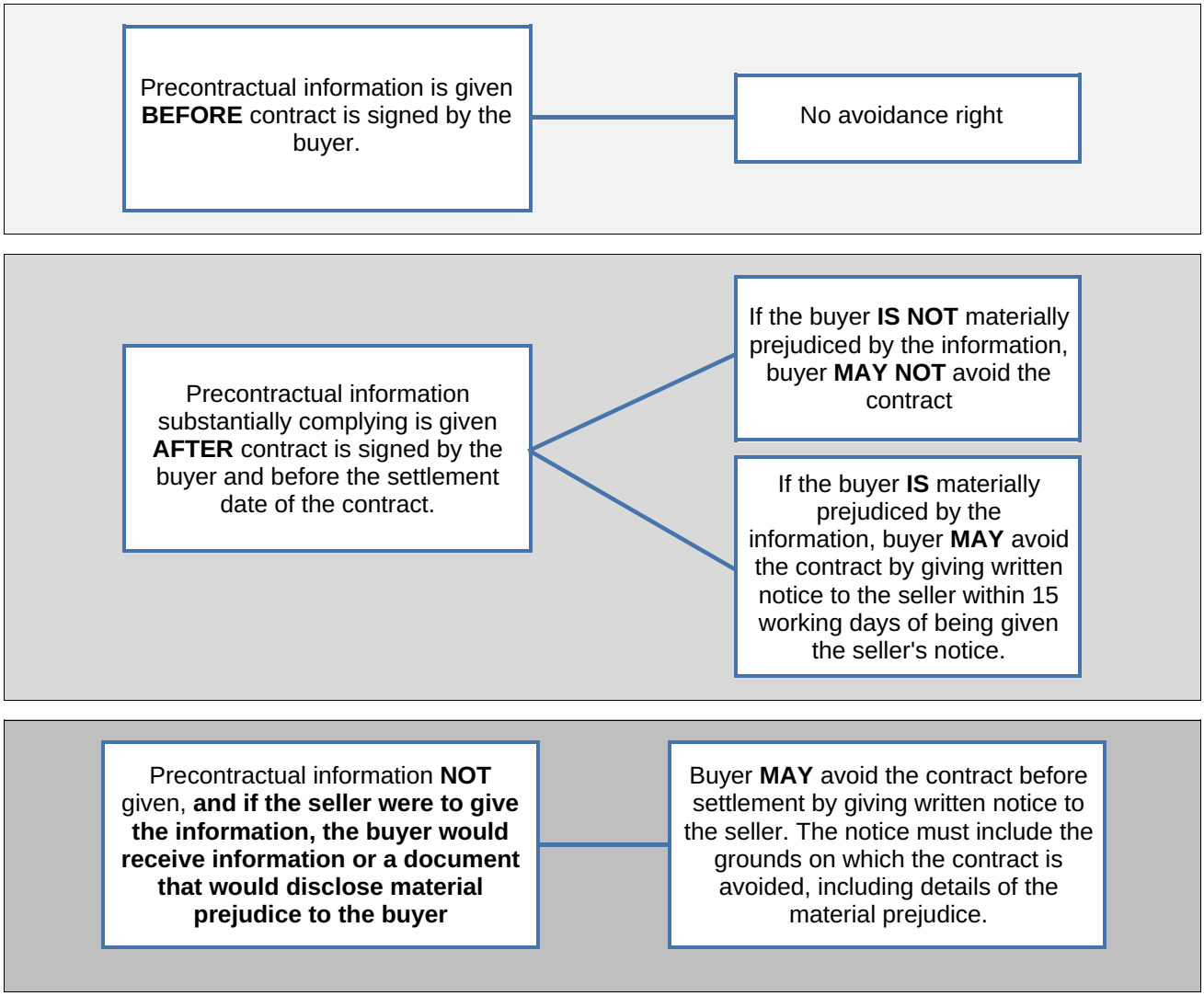

Avoidance rights for notifiable variations

After the buyer has signed the contract, it is possible a particular type of event known as a type 1 or type 2 notifiable variation may occur. If this happens, the seller must provide written notice of the variation to the buyer before the proposed settlement date.

Type 1 and Type 2 notifiable variations are as follows:

Type 1 Notifiable Variation	Type 2 Notifiable Variation
• The area or size of the lot/proposed lot is reduced by 5% or more from the area or size notified to the buyer before the buyer entered into the contract. • The proportion that the unit entitlement, or a reasonable estimate of the unit entitlement of the lot bears to the sum of the unit entitlements of all the lots is increased/decreased by 5% or more in comparison to that which was notified to the buyer before the buyer entered into the contract. • Anything relating to a proposal for the termination of the strata titles scheme is served on the seller by the strata company. • Any other event classified by the regulations as a type 1 notifiable variation.	• The current/proposed scheme plan or amendment of the scheme plan for the scheme is modified in a way that affects the lot or the common property (that is not a type 1 notifiable variation). • The current/proposed schedule of unit entitlements or amendment of the schedule of unit entitlements for the scheme is modified in a way that affects the lot (that is not a type 1 variation). • The strata company or a scheme developer- (i) enters into a contract for the provision of services or amenities to the strata company or to members of the strata company or a contract that is otherwise likely to affect the rights of the buyer; OR (ii) varies an existing contract of that kind in a way that is likely to affect the rights of the buyer • The current/proposed scheme by-laws are modified. • A lease, licence, right or privilege over the common property in the strata titles scheme is granted or varied. • Any other event classified by the regulations as a type 2 notifiable variation.

See section 161 and 162 of the Act for further details.

Regulation 106 describes when certain notifiable variations are deemed to have occurred.

The buyer's right to avoid the contract for notifiable variations is as follows:

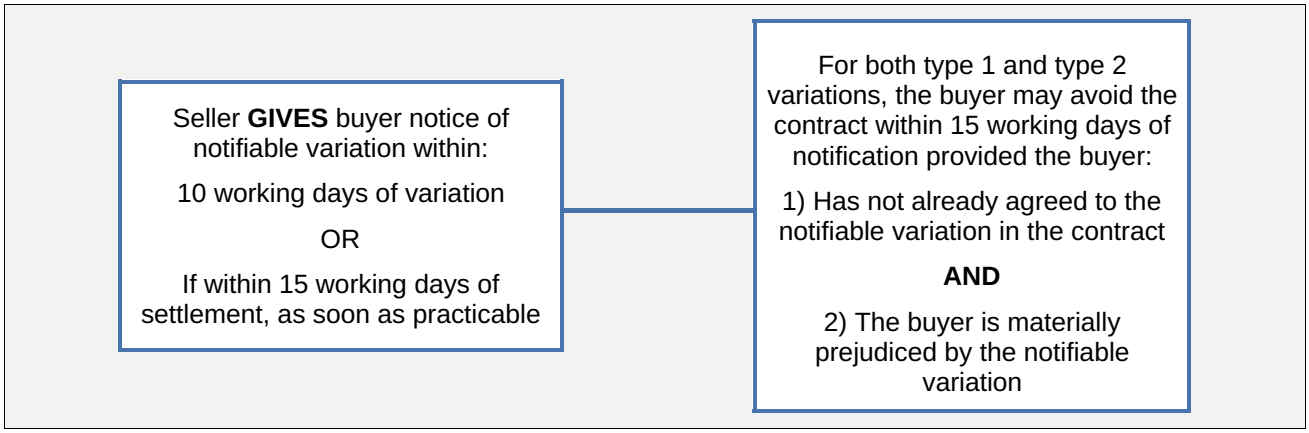

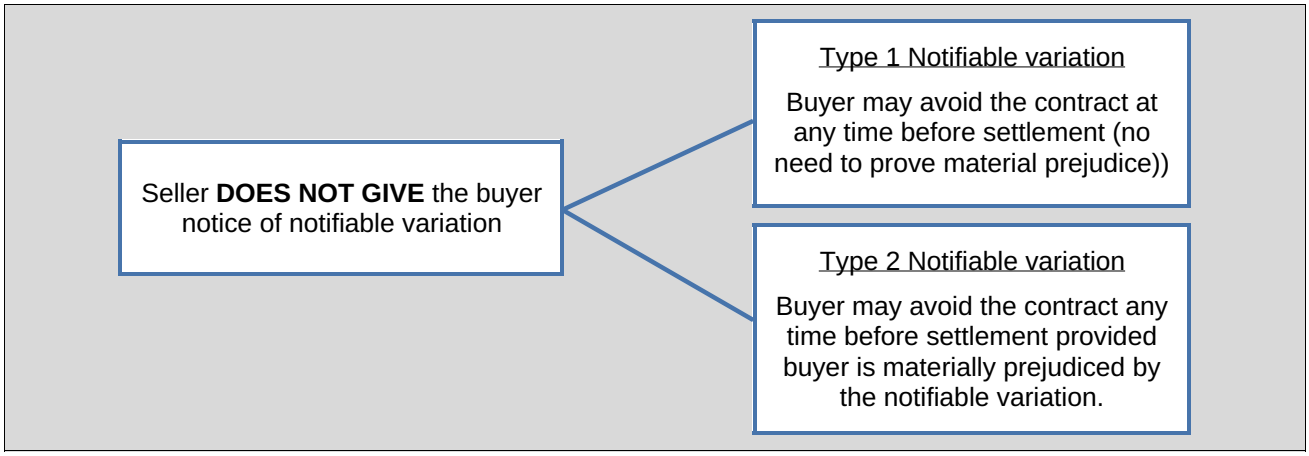

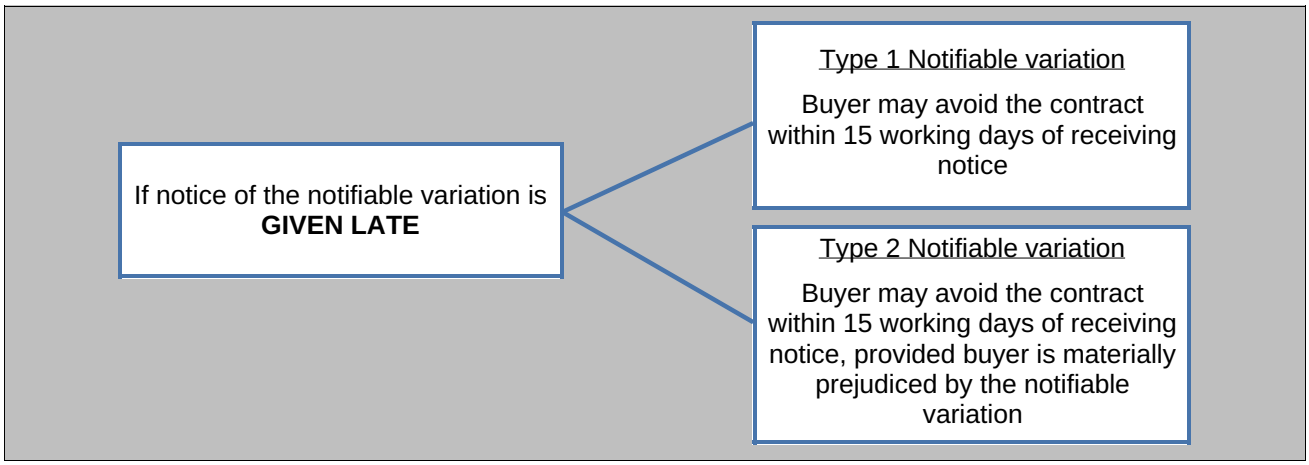

See section 163 of the Act for special protections which apply if the lot has not yet been created by the registration of the scheme or an amendment of the scheme - that is, an 'off the plan' sale.

Buyer's right to postpone settlement

The buyer has a right to postpone settlement date of the contract for the sale and purchase of the lot, by providing written notice to the seller, if the seller has not complied with their obligation to provide pre-contractual information or particulars of a notifiable variation to the buyer. The buyer may postpone settlement date by no more than 15 working days after the latest date that the seller complies with the relevant disclosure requirement.

Disputes about avoidance rights to be heard in the State Administrative Tribunal

If the buyer or seller has a dispute about a right to avoid or whether a seller has provided the notifiable information / notifiable variations as required and within the time required, the buyer and or seller may apply to the State Administrative Tribunal for orders to resolve the dispute.

Precontractual Disclosure Statement to the Buyer

Part B | Information specific to the sale of the strata lot

This form sets out the information requirements in section 156 of the *Strata Titles Act 1985* (the Act), that the seller must give the buyer. It is the information designated as information specific to the sale of a strata lot. which, if included in the contract, must be included in a prominent position (such as the first page). The term 'lot' includes strata and survey-strata lot.

Personal information

The seller(s)

Name: Raymond Kit Siong Ong

Address:

Telephone/mobile: _____ Email: _____

Name: Siew Jong Foo

Address:

Telephone/mobile: _____ Email: _____

Scheme Information

The term 'scheme' includes strata and survey-strata schemes

Scheme Details

Scheme name	Burswood Gardens
Name of the strata company	Burswood Gardens
Address for service of the strata company (taken from scheme notice)	7/11 Heirisson Way, Victoria Park WA 6100
Name of Strata Manager	Richardson Strtata Management Services
Address of Strata Manager	138 Burswood Road, Burswood WA 6100
Telephone/Mobile	08 9472 1833
Email	reception@richardsonstrata.com.au

The status of the scheme is:

- ☐ proposed
- ☑ registered

The scheme type is:

- ☑ strata
- ☐ survey-strata

The tenure type is

- ☑ freehold
- ☐ leasehold

~~For leasehold only:~~

The scheme has a term of _____ years _____ months _____ days commencing on registration of the scheme _____

If there is a registered scheme notice, the expiry day for the leasehold scheme is _____

For any attachments, please include the attachment number in the column titled 'Att.' on the right-hand side of this document.

Att.

Scheme Documents (must be attached)

Schemes created on or after 1/5/2020 must provide a copy of the scheme notice. Schemes created before 1/5/2020 only have to provide a scheme notice if a change of scheme name or address was registered on or after 1 May 2020. — N/A

A copy of the scheme plan showing the exact location and definition of the lot — Att 1

A copy of the scheme by-laws — Att 3

A copy of the scheme by-laws made but not yet registered by the Registrar of Titles at Landgate

Do the scheme by-laws include staged subdivision by-laws ☐ no ☐ yes

☐ If yes, they are included with this form

☐ If yes, they are not included but a notice concerning staged subdivision by-laws that are spent has been provided

A copy of the schedule of unit entitlements showing the unit entitlement of the lot AND sum of unit entitlements of all the lots in the scheme — Att 2

If this is a leasehold lot, a copy of the strata lease for the lot

Additional comments: _____

Minutes (choose one option)

☑ A copy of the minutes of the most recent annual general meeting and any subsequent extraordinary general meeting(s) — Att 4

☐ A statement that the strata company does not keep minutes of its meetings*

☐ A statement of why the seller has been unable to obtain the minutes

Additional comments: _____

Statement of accounts (choose one option)

☑ The statement of accounts last prepared by the strata company — Att 5

☐ A statement that the strata company does not prepare a statement of accounts*

☐ A statement of why the seller has been unable to obtain a statement of accounts

** Note that section 140(1) sets out that 2-lot schemes are not required to keep minutes or statements of account, and section 140(3) provides that 3, 4 and 5-lot schemes are allowed to have a by-law exempting them from these requirements. If this applies to the scheme, write that down in these fields.*

Additional comments: _____

Termination proposal

Has the seller received a copy of any notice from the strata company in relation to any current termination proposal for the scheme? ☐ no ☐ yes N/A

If yes, attach a copy.

Lot information (choose all that apply) **Att.**

☑ This lot is on a registered scheme plan

☐ This lot has not yet been created

☐ This lot is a leasehold strata expiring on _____
(being the expiry day of the scheme set out in the scheme notice)

Street address of the lot (if known)
7/11 Heirisson Way, Victoria Park WA 6100

Lot 47 on scheme plan no. 33257

(The lot owner will also own a share in the common property of the scheme)

Voting right restrictions

Does the contract contain any voting right restriction which has the meaning in regulation 103 of the *Strata Titles (General) Regulations 2019*? * ☑ no ☐ yes

If yes, describe the restriction _____

** A voting right restriction includes if the contract requires the buyer to grant an enduring proxy or power of attorney to the seller.*

Exclusive use by-laws

This lot is a 'special lot', subject to exclusive use by-laws giving exclusive use of an area of common property ☐ no ☐ yes

If yes, please give details _____ N/A

Strata levy/contributions for the lot (choose one option)

(Local government rates are payable by the lot owner in addition to the strata levy/contributions)

☑ Contributions that have been determined within the previous 12 months

☐ If not determined, estimated contributions for 12 months after proposed settlement date

	Actual ($)	**OR**	**Estimated ($) 12 months after the proposed settlement date**
Administrative fund:	$3,345.80		
Reserve fund:	$644.05		
Other levy (attach details)	$525.15		

Att 6

☐ Actual ☑ Estimated total contribution for the lot $ 4,515.00

Payable ☑ annually ☐ bi-annually ☐ quarterly ☐ other: _____

Due dates _____ on _____ _____ on _____

_____ on _____ _____ on _____

Strata levy/contributions/other debts owing

If the seller has a debt owed to the strata company, the total amount owing is $ N/A

If the seller has a debt owed to a utility company, the total amount owing is $ N/A

Details of who is owed, how the debt arose, date on which it arose and the amount outstanding is attached. ____

Additional comments: _____

Scheme developer specific information

Information specific to the sale of a strata lot - only to be **completed if the seller of the lot is a scheme developer** **Att.**

The scheme developer is defined as:

- The registered owner(s) of a lot(s) before it is subdivided by a strata titles scheme
- The registered owner/s of a lot in a staged strata development that is to be subdivided by the registration of an amendment of scheme to which staged subdivision by-laws apply

This part applies where the seller of the lot is a scheme developer in any of the following circumstances:

- The scheme has not been registered
- The first annual general meeting of the strata company has not been held
- The scheme developer owns 50% or more of the lots
- The scheme developer owns lots with an aggregate unit entitlement of 50% or more of the sum of the unit entitlements of all lots in the scheme

Statement of estimated income and expenditure

A statement of the estimated income and expenditure of the strata company for the 12 months after the proposed settlement date is attached. ____

Additional comments: _____

Agreements for amenity or service

Are there any current or proposed contracts for the provision of any amenity or service to the proposed strata company/strata company or members of the strata company entered into or arranged by the scheme developer? ☐ no ☐ yes

If yes, attach details including terms and conditions, the consideration and estimated costs to members of the strata company ____

Additional comments: _____

Lease, licence, exclusive right or use and enjoyment or special privilege over common property

Are there any current or proposed leases, licences, right of exclusive use and enjoyment, restricted right of use and enjoyment, or special privilege over common property? ☐ no ☐ yes

If yes, attach details including terms and conditions. ____

Additional comments: _____

Section 79 Disclosure of remuneration and other benefits

Has the scheme developer and/or their associate received or reasonably expects to receive remuneration or other benefit? ☐ no ☐ yes

Is there any other direct or indirect pecuniary interest the scheme developer and/or their associate has in the contract, lease or licence other than as a member of the strata company? ☐ no ☐ yes

If yes, attach details of any remuneration, other benefit and/or pecuniary interest disclosed in accordance with s.79 of the Act, including its value. _____

Additional comments: _____

Acknowledgement by seller and buyer

The statements by the seller and buyer relate to the following precontractual disclosures:

- **Part A, general information about strata titles schemes**. This information can be included in a form that is separate from the rest of the contract; and
- **Part B, information specific to the sale of a strata lot**. This information can be included in a separate form, or within the contract in a prominent position.
  Both the Part A and Part B disclosures can be provided electronically if the buyer has consented to this.

Statement by the seller(s) / seller's representative

☐ **I** / ☐ **We**[1], hereby certify that Part A and Part B of the required precontractual disclosures were given to the buyer before the buyer signed the contract of sale.

Signature _____

Name Raymond Kit Siong Ong

Date _____

Signature _____

Name Siew Jong Foo

Date _____

Statement by the buyer(s) / buyer's representative

☐ **I** / ☐ **We**[1], the buyer/s, acknowledge that ☐ **I** / ☐ **we**[1] received Part A and Part B of the required precontractual disclosures before ☐ **I** / ☐ **We**[1] signed the contract of sale.

☐ **I** / ☐ **We**[1] understand that the disclosures given by the seller(s) or by the seller's representative are not an offer or a contract to purchase a lot (though they may be included in such contract) but only provide information to ☐ **me** / ☐ **us**[1].

Signature _____

Name _____

Date _____

Signature _____

Name _____

Date _____

[1] Select one.

LANDGATE COPY OF ORIGINAL NOT TO SCALE 29/08/2025 12:06 PM Request number: 68687691
www.landgate.wa.gov.au

STRATA/~~SURVEY-STRATA~~ PLAN 33257

SHEET 1 OF 8 SHEETS

MANAGEMENT STATEMENT ☐ YES ☒ NO

Lodged 20.8.97 170803
Examined 20.8.97 VTH
Registered 20.8.97 APP. G560414

REGISTRAR OF TITLES

WESTERN AUSTRALIAN PLANNING COMMISSION

Certificate of Approval of W.A.P.C. under Section 25(1) or 25B(2) of *Strata Tiles*

FOR CHAIRMAN ..... DATE .....

PLAN OF
LOT 829 OF SWAN LOCATION 36
ON PLAN 21200

CERT. OF TITLE
VOLUME: 2063 FOLIO: 326

LOCAL GOVERMENT
TOWN OF VICTORIA PARK

INDEX PLAN
PERTH 1000 29.45

FIELD BOOK NUMBER

SCALE **1: 500, 1: 750**

NAME OF SCHEME
BURSWOOD GARDENS

ADDRESS OF PARCEL
7- 11 HEIRISSON WAY
VICTORIA PARK
WA 6100

DOLA
Department of LAND ADMINISTRATION

THE RIGHT TO MINES OF COAL OR OTHER MINERALS BEING EXCLUDED FROM PORTION OF THE WITHIN LAND

LOCATION PLAN

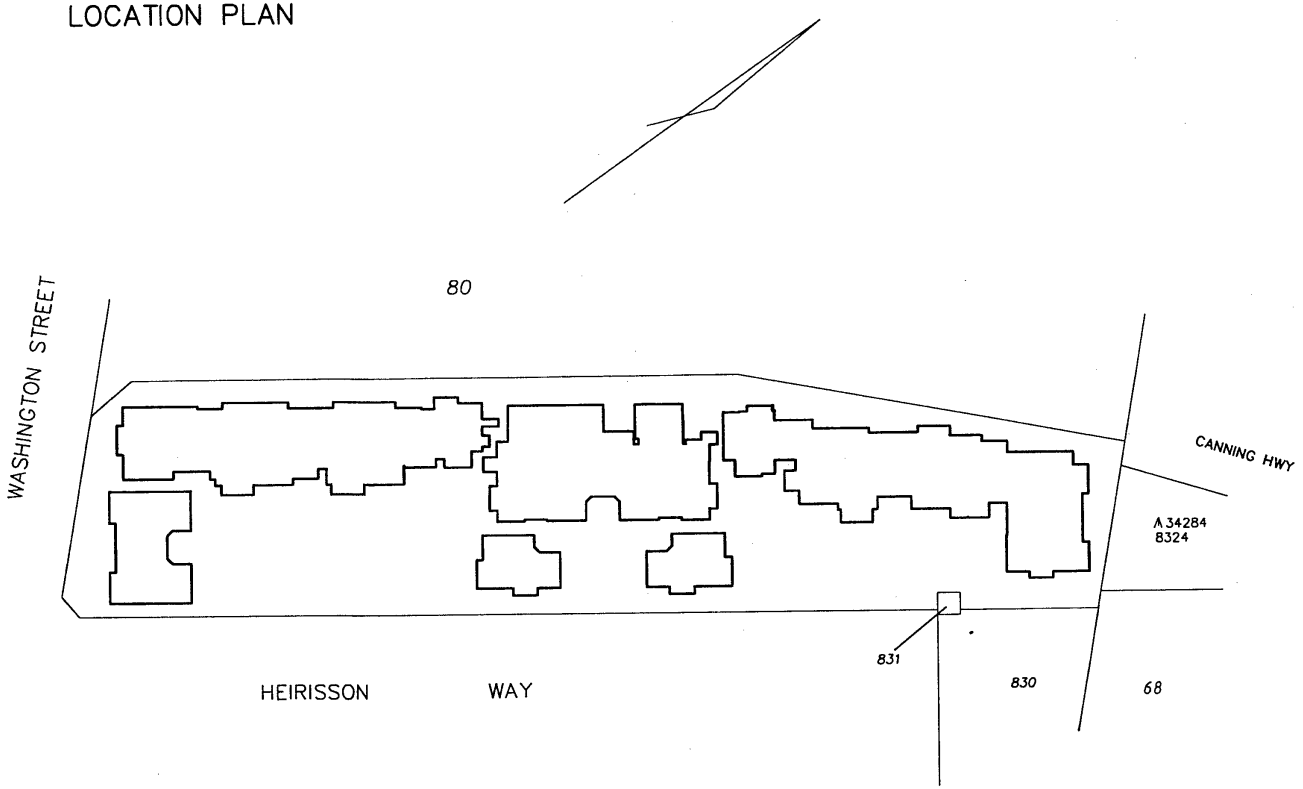

SCALE: 1: 750

HELD BY LANDGATE IN DIGITAL FORM ONLY.

STRATA PLAN 33257

WARNING: CREASING OR FOLDING WILL LEAD TO REJECTION

LANDGATE COPY OF ORIGINAL NOT TO SCALE 29/08/2025 12:06 PM Request number: 68687691
www.landgate.wa.gov.au
Landgate

STRATA/~~SURVEY-STRATA~~ PLAN 33257

SHEET 2 OF 8 SHEETS

BASEMENT

REFER TO ENLARGEMENT ON SHEET 3 OF 8

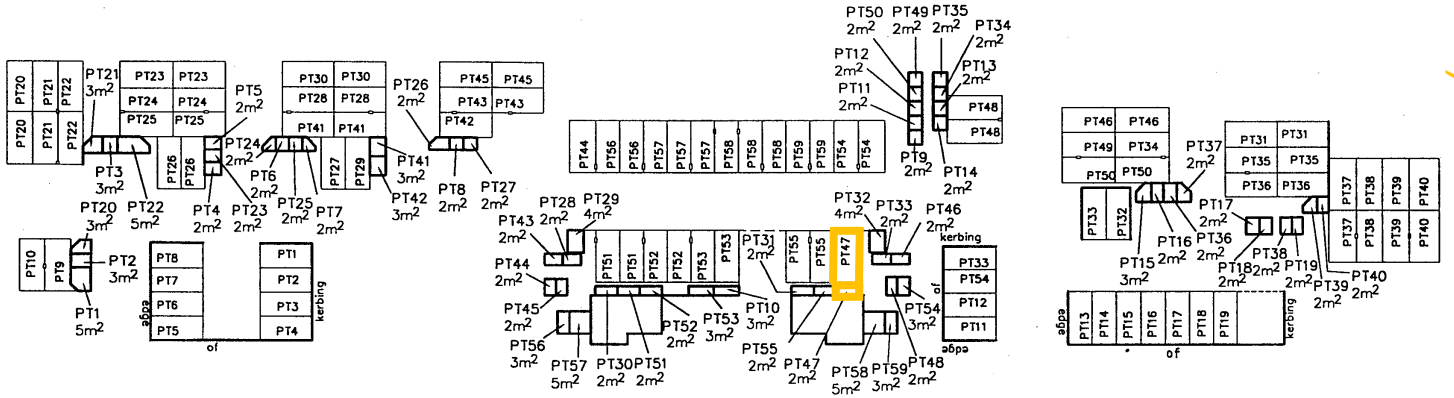

WHERE 2 LOTS HAVE A COMMON OR PARTY WALL OR HAVE BUILDINGS ON THEM WHICH ARE JOINED, THE CENTRE PLANE OF THAT WALL OR THE PLANE AT WHICH THEY ARE JOINED IS THE BOUNDARY.

CAR SPACES EXTEND TO A HEIGHT OF 2.5 METRES ABOVE THE UPPER SURFACE OF THEIR RESPECTIVE FLOOR EXCEPT WHERE COVERED.

THE BOUNDARIES OF THE LOTS OR PART OF THE LOTS WHICH ARE BUILDINGS SHOWN ON THE STRATA PLAN ARE THE EXTERNAL SURFACES OF THOSE BUILDINGS, UNLESS NOTED OTHERWISE

THE HORIZONTAL BOUNDARIES OF THE BUILDING PART LOTS ARE THE UPPER SURFACE OF THE FLOOR AND THE UNDER SURFACE OF THE CEILING

SCALE: 1: 500

WARNING: CREASING OR FOLDING WILL LEAD TO REJECTION

Attachment 1 (1 of 3)

Cor 52 | 1997 Vol 4 p 8

Attachment 1 (2 of 3)

Cor 52/1997 Vol 4 Fol 8

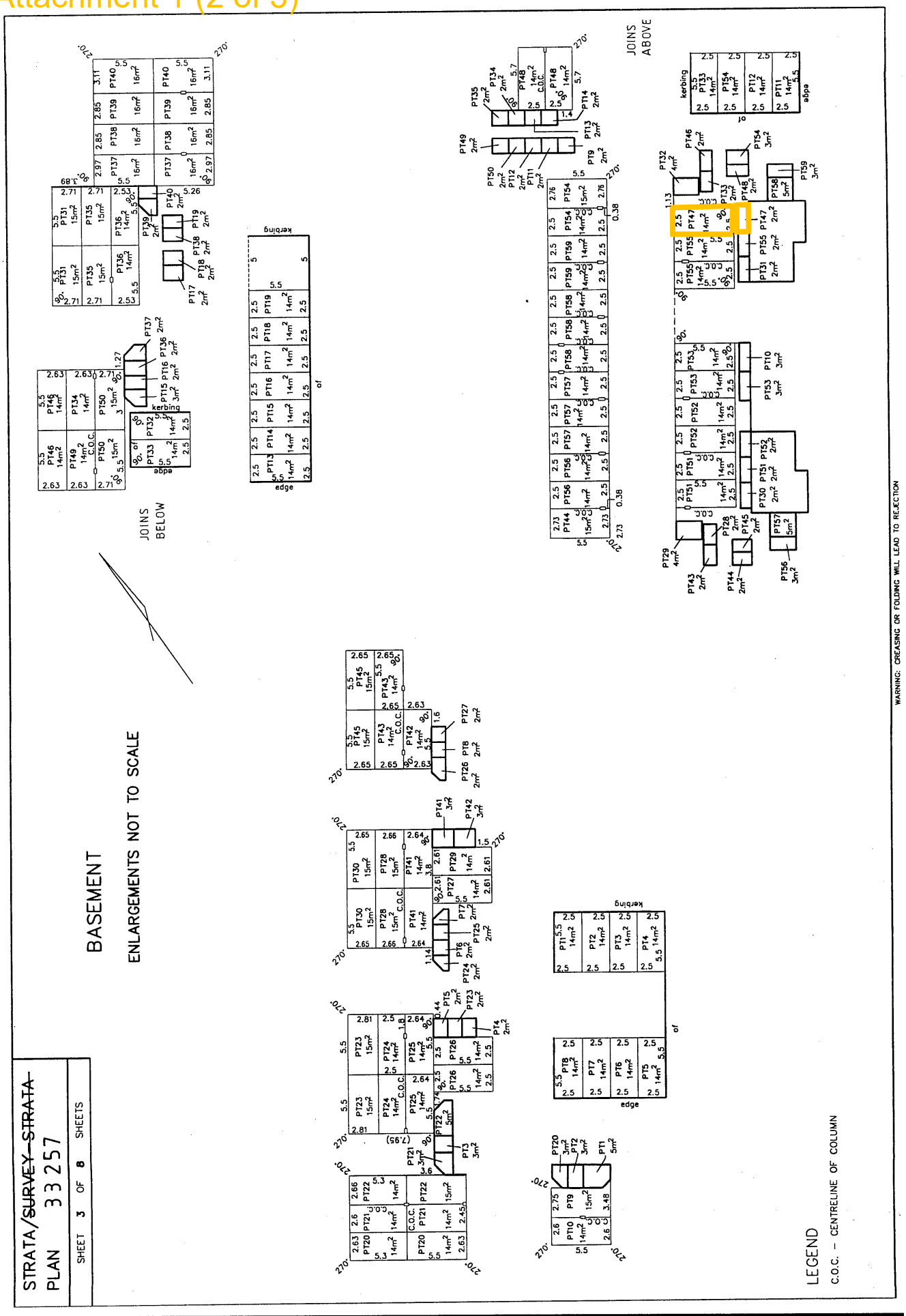

LANDGATE COPY OF ORIGINAL NOT TO SCALE 29/08/2025 12:06 PM Request number: 68687691

Landgate
www.landgate.wa.gov.au

LANDGATE COPY OF ORIGINAL NOT TO SCALE 29/08/2025 12:06 PM Request number: 68687691
www.landgate.wa.gov.au
Landgate

STRATA/~~SURVEY-STRATA~~ PLAN 33257

SHEET 4 OF 8 SHEETS

GROUND FLOOR

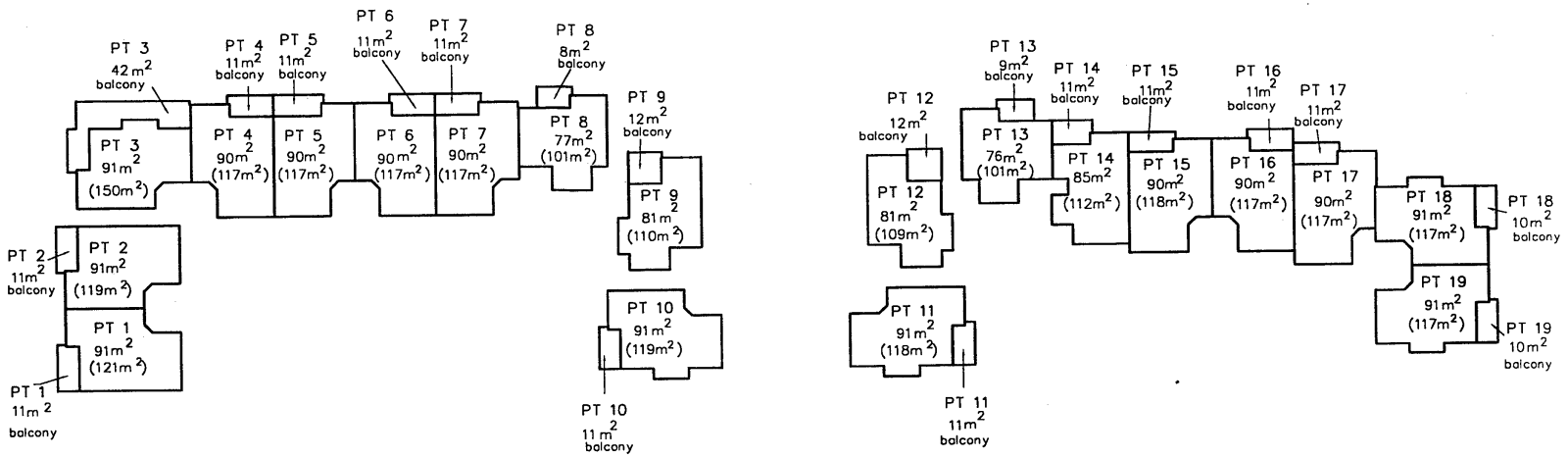

WHERE 2 LOTS HAVE A COMMON OR PARTY WALL OR HAVE BUILDINGS ON THEM WHICH ARE JOINED, THE CENTRE PLANE OF THAT WALL OR THE PLANE AT WHICH THEY ARE JOINED IS THE BOUNDARY.

THE BOUNDARIES OF THE LOTS OR PART OF THE LOTS WHICH ARE BUILDINGS SHOWN ON THE STRATA PLAN ARE THE EXTERNAL SURFACES OF THOSE BUILDINGS, UNLESS NOTED OTHERWISE

THE HORIZONTAL BOUNDARIES OF THE BUILDING PART LOTS ARE THE UPPER SURFACE OF THE FLOOR AND THE UNDER SURFACE OF THE CEILING

BALCONIES EXTEND TO A HEIGHT OF 2.5 METRES ABOVE THE UPPER SURFACE OF THEIR RESPECTIVE FLOORS EXCEPT WHERE COVERED

SCALE: 1: 500

WARNING: CREASING OR FOLDING WILL LEAD TO REJECTION

Col 52/1997 Vol 4 p 8

LANDGATE COPY OF ORIGINAL NOT TO SCALE 29/08/2025 12:06 PM Request number: 68687691
www.landgate.wa.gov.au
Landgate

STRATA/~~SURVEY-STRATA~~
PLAN 33257
SHEET 5 OF 8 SHEETS

FIRST FLOOR

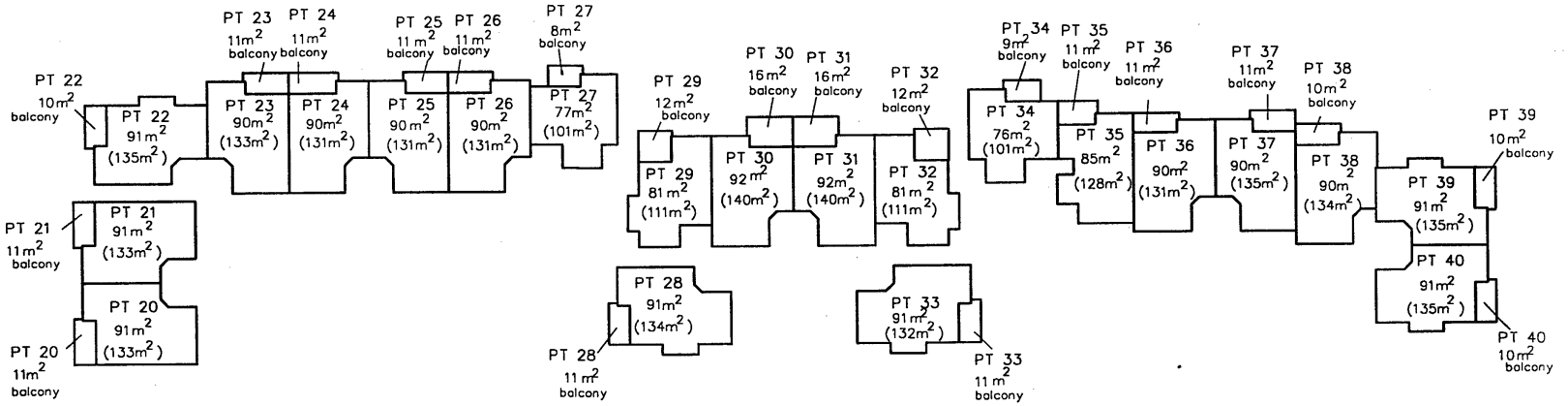

WHERE 2 LOTS HAVE A COMMON OR PARTY WALL OR HAVE BUILDINGS ON THEM WHICH ARE JOINED, THE CENTRE PLANE OF THAT WALL OR THE PLANE AT WHICH THEY ARE JOINED IS THE BOUNDARY.

THE BOUNDARIES OF THE LOTS OR PART OF THE LOTS WHICH ARE BUILDINGS SHOWN ON THE STRATA PLAN ARE THE EXTERNAL SURFACES OF THOSE BUILDINGS, UNLESS NOTED OTHERWISE

THE HORIZONTAL BOUNDARIES OF THE BUILDING PART LOTS ARE THE UPPER SURFACE OF THE FLOOR AND THE UNDER SURFACE OF THE CEILING

BALCONIES EXTEND TO A HEIGHT OF 2.5 METRES ABOVE THE UPPER SURFACE OF THEIR RESPECTIVE FLOORS EXCEPT WHERE COVERED

SCALE: 1: 500

WARNING: CREASING OR FOLDING WILL LEAD TO REJECTION

cor 52/1997 Vol 4 p 8

LANDGATE COPY OF ORIGINAL NOT TO SCALE 29/08/2025 12:06 PM Request number: 68687691
www.landgate.wa.gov.au
Landgate

Attachment 1 (3 of 3)

Cor 52 | 1997 Vol 4 p 8

STRATA/~~SURVEY-STRATA~~
PLAN 33257
SHEET 6 OF 8 SHEETS

SECOND FLOOR

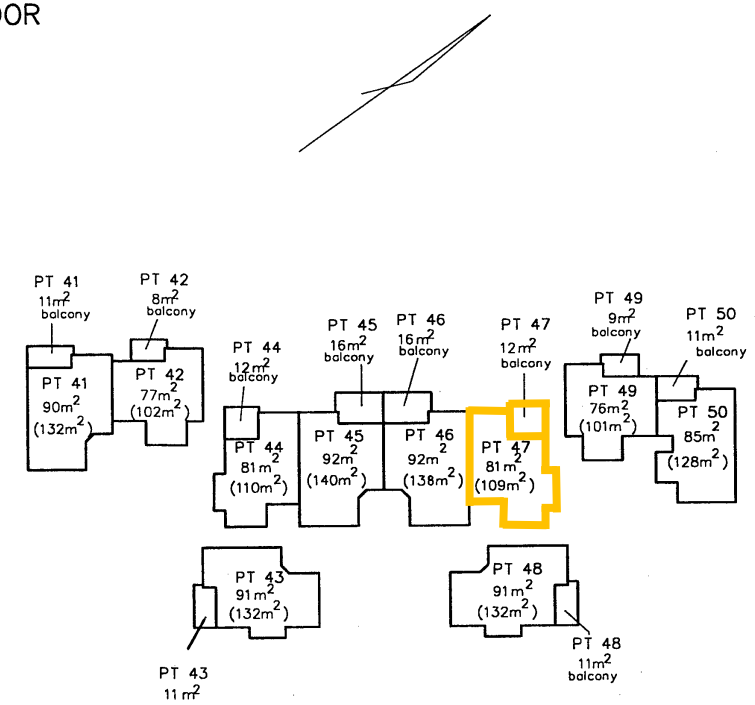

WHERE 2 LOTS HAVE A COMMON OR PARTY WALL OR HAVE BUILDINGS ON THEM WHICH ARE JOINED, THE CENTRE PLANE OF THAT WALL OR THE PLANE AT WHICH THEY ARE JOINED IS THE BOUNDARY.

THE BOUNDARIES OF THE LOTS OR PART OF THE LOTS WHICH ARE BUILDINGS SHOWN ON THE STRATA PLAN ARE THE EXTERNAL SURFACES OF THOSE BUILDINGS, UNLESS NOTED OTHERWISE

THE HORIZONTAL BOUNDARIES OF THE BUILDING PART LOTS ARE THE UPPER SURFACE OF THE FLOOR AND THE UNDER SURFACE OF THE CEILING

BALCONIES EXTEND TO A HEIGHT OF 2.5 METRES ABOVE THE UPPER SURFACE OF THEIR RESPECTIVE FLOORS EXCEPT WHERE COVERED

SCALE: 1: 500

WARNING: CREASING OR FOLDING WILL LEAD TO REJECTION

LANDGATE COPY OF ORIGINAL NOT TO SCALE 29/08/2025 12:06 PM Request number: 68687691
www.landgate.wa.gov.au

STRATA/~~SURVEY-STRATA~~
PLAN 33257

SHEET 7 OF 8 SHEETS

THIRD FLOOR

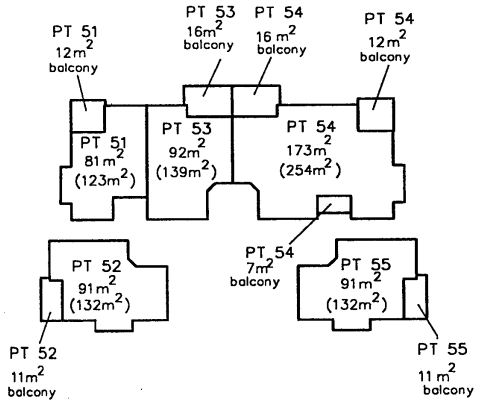

WHERE 2 LOTS HAVE A COMMON OR PARTY WALL OR HAVE BUILDINGS ON THEM WHICH ARE JOINED, THE CENTRE PLANE OF THAT WALL OR THE PLANE AT WHICH THEY ARE JOINED IS THE BOUNDARY.

THE BOUNDARIES OF THE LOTS OR PART OF THE LOTS WHICH ARE BUILDINGS SHOWN ON THE STRATA PLAN ARE THE EXTERNAL SURFACES OF THOSE BUILDINGS, UNLESS NOTED OTHERWISE

THE HORIZONTAL BOUNDARIES OF THE BUILDING **PART LOTS ARE THE UPPER** SURFACE OF THE FLOOR AND THE UNDER SURFACE OF THE CEILING

BALCONIES EXTEND TO A HEIGHT OF 2.5 METRES ABOVE THE UPPER SURFACE OF THEIR RESPECTIVE FLOORS EXCEPT WHERE COVERED

SCALE: 1: 500

WARNING: CREASING OR FOLDING WILL LEAD TO REJECTION

Col 52/1997 Vol 4 f 8

LANDGATE COPY OF ORIGINAL NOT TO SCALE 29/08/2025 12:06 PM Request number: 68687691
www.landgate.wa.gov.au

STRATA/~~SURVEY-STRATA~~ PLAN 33257
SHEET 8 OF 8 SHEETS

COR 52/1997 Vol 4 P8

FOURTH FLOOR

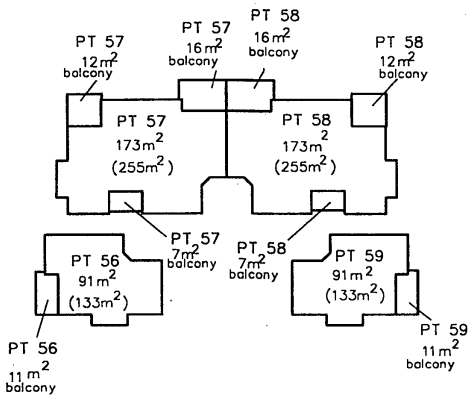

WHERE 2 LOTS HAVE A COMMON OR PARTY WALL OR HAVE BUILDINGS ON THEM WHICH ARE JOINED, THE CENTRE PLANE OF THAT WALL OR THE PLANE AT WHICH THEY ARE JOINED IS THE BOUNDARY.

THE BOUNDARIES OF THE LOTS OR PART OF THE LOTS WHICH ARE BUILDINGS SHOWN ON THE STRATA PLAN ARE THE EXTERNAL SURFACES OF THOSE BUILDINGS, UNLESS NOTED OTHERWISE

THE HORIZONTAL BOUNDARIES OF THE BUILDING PART LOTS ARE THE UPPER SURFACE OF THE FLOOR AND THE UNDER SURFACE OF THE CEILING

BALCONIES EXTEND TO A HEIGHT OF 2.5 METRES ABOVE THE UPPER SURFACE OF THEIR RESPECTIVE FLOORS EXCEPT WHERE COVERED

SCALE: 1: 500

WARNING: CREASING OR FOLDING WILL LEAD TO REJECTION

ANNEXURE 'A'

FORM 3

STRATA / ~~SURVEY STRATA~~ PLAN NO. 33257					
Schedule of Unit Entitlement		OFFICE USE ONLY Current Cs of Title	Schedule of Unit Entitlement		OFFICE USE ONLY Current Cs of Title
Lot No	Unit Entitlement	Vol. Folio.	Lot No	Unit Entitlement	Vol. Folio.
1	152	2112-601	18	157	2112-618
2	152	2112-602	19	152	2112-619
3	158	2112-603	20	159	2112-620
4	156	2112-604	21	159	2112-621
5	156	2112-605	22	164	2112-622
6	156	2112-606	23	164	2112-623
7	156	2112-607	24	164	2112-624
8	141	2112-608	25	164	2112-625
9	156	2112-609	26	164	2112-626
10	139	2112-610	27	146	2112-627
11	139	2112-611	28	162	2112-628
12	156	2112-612	29	144	2112-629
13	141	2112-613	30	169	2112-630
14	156	2112-614	31	169	2112-631
15	156	2112-615	32	144	2112-632
16	156	2112-616	33	162	2112-633
17	156	2112-617	34	146	2112-634
Aggregate			Aggregate		

DESCRIPTION OF PARCEL AND BUILDING/PARCEL

59 residential units in a multi-storey complex of brick and tile construction situated on Lot 829 of Swan Location 36 on Plan 21200 and having an address of 7 - 11 Heirisson Way Victoria Park WA 6100.

CERTIFICATE OF LICENSED VALUER
STRATA/SURVEY STRATA

I, Antonio Bonavita, being a Licensed Valuer licensed under the Land Valuers Licensing Act 1978 certify that the unit entitlement of each Lot (in this certificate, excluding any common property lots), as stated in the schedule bears in relation to the aggregate unit entitlement of all lots delineated on the plan a proportion not greater than 5 per cent more or 5 per cent less than the proportion that the value (as that term is defined in section 14 (2a) of the Strata Titles Act 1985) of that lot bears to the aggregate value of all the lots delineated on the plan.

26th June 1997
Date

Signed

LANDGATE COPY OF ORIGINAL NOT TO SCALE 29/08/2025 12:06 PM Request number: 68687691

Landgate
www.landgate.wa.gov.au

Attachment 2

ANNEXURE 'B'

FORM 3

STRATA / ~~SURVEY STRATA~~ PLAN NO. 33257

Schedule of Unit Entitlement		OFFICE USE ONLY Current Cs of Title		Schedule of Unit Entitlement		OFFICE USE ONLY Current Cs of Title	
Lot No	Unit Entitlement	Vol.	Folio.	Lot No	Unit Entitlement	Vol.	Folio.
35	164	2112 - 635		52	160	2112 - 652	
36	164	2112 - 636		53	184	2112 - 653	
37	164	2112 - 637		54	337	2112 - 654	
38	164	2112 - 638		55	178	2112 - 655	
39	165	2112 - 639		56	186	2112 - 656	
40	159	2112 - 640		57	344	2112 - 657	
41	173	2112 - 641		58	344	2112 - 658	
42	154	2112 - 642		59	186	2112 - 659	
43	170	2112 - 643					
44	154	2112 - 644					
45	175	2112 - 645					
46	175	2112 - 646					
47	154	2112 - 647					
48	170	2112 - 648					
49	154	2112 - 649					
50	173	2112 - 650					
51	178	2112 - 651					
Aggregate				Aggregate	10000		

DESCRIPTION OF PARCEL AND BUILDING/PARCEL

59 residential units in a multi-storey complex of brick and tile construction situated on Lot 829 of Swan Location 36 on Plan 21200 and having an address of 7 - 11 Heirisson Way Victoria Park WA 6100.

CERTIFICATE OF LICENSED VALUER
STRATA/SURVEY STRATA

I, Antonio Bonavita, being a Licensed Valuer licensed under the Land Valuers Licensing Act 1978 certify that the unit entitlement of each Lot (in this certificate, excluding any common property lots), as stated in the schedule bears in relation to the aggregate unit entitlement of all lots delineated on the plan a proportion not greater than 5 per cent more or 5 per cent less than the proportion that the value (as that term is defined in section 14 (2a) of the Strata Titles Act 1985) of that lot bears to the aggregate value of all the lots delineated on the plan.

26th June 1997
Date

Signed

LANDGATE COPY OF ORIGINAL NOT TO SCALE 29/08/2025 12:06 PM Request number: 68687691

Landgate
www.landgate.wa.gov.au

FORM 5

Strata Titles Act 1985
Sections 5B (1), 8A, 22 (1)

STRATA PLAN No. 33257

DESCRIPTION OF PARCEL & BUILDING

59 residential units in a multi-storey complex of brick and tile construction situated on Lot 829 of Swan Location 36 on Plan 21200 and having an address of 7-11 Heirisson Way Victoria Park WA 6100.

CERTIFICATE OF SURVEYOR

I, Hoot Khoon Teoh being a licensed surveyor registered under the *Licensed Surveyors Act 1909* certify that in respect of the strata plan which relates to the parcel and building described above (in this certificate called "the plan"):-

(a) each lot that is not wholly within a building shown on the plan is within the external surface boundaries of the parcel; and either

(b) each building shown on the plan is within the external surface boundaries of the parcel; or

(c) ~~in a case where a part of a wall or building, or material attached to a wall or building, encroaches beyond the external surface boundaries of the parcel -~~

(i) ~~all lots shown on the plan are within the external surface boundaries of the parcel;~~

(ii) ~~the plan clearly indicates the existence of the encroachment and its nature and extent; and~~

(iii) ~~where the encroachment is not on to a public road, street or way, that an appropriate easement has been granted and will be lodged with the Registrar of Titles to enable it to be registered as an appurtenance of the parcel; and~~

*(d) ~~if the plan is a plan of re-subdivision, it complies with Schedule 1 by-laws(s) no(s) ..... on Strata Plan no ..... registered in respect of (name of scheme) or sufficiently complies with that/those by-law(s) in a way that is allowed by regulation 36 of the *Strata Titles General Regulations 1996*.~~

11/8/97
Date

Licensed Surveyor

* Delete if inapplicable

LANDGATE COPY OF ORIGINAL NOT TO SCALE 29/08/2025 12:06 PM Request number: 68687691

Landgate
www.landgate.wa.gov.au

FORM 7

STRATA PLAN No. 33257

DESCRIPTION OF PARCEL & BUILDING

59 residential units in a multi-storey complex of brick and tile construction situated on Lot 829 of Swan Location 36 on Plan 21200 and having an address of 7-11 Heirisson Way Victoria Park WA 6100.

CERTIFICATE OF LOCAL GOVERNMENT

Town Of Victoria Park, the local government hereby certifies that in respect of the strata plan which relates to the parcel and building described above (in this certificate called "the plan"):-

(1) (a) the building and the parcel shown on the plan have been inspected and that it is consistent with the approved building plans and specifications in respect of the building; or

~~(b) the building has been inspected and the modification is consistent with the approved building plans and specifications relating to the modification;~~

(2) the building, in the opinion of the local government, is of sufficient standard to be brought under the Strata Titles Act 1985;

~~(3) where a part of a wall or building or material attached to a wall or building~~ encroaches beyond the external surface boundaries of the parcel on to a public road, ~~street or way~~ the local government is of the opinion that retention of the encroachment in ~~its existing~~ state will not endanger public safety or unreasonably interfere with the amenity of ~~the~~ neighbourhood ~~and the local government does not object to the encroachment; and~~

(4) (a) any conditions imposed by the Western Australian Planning Commission have been complied with; or

~~(b) the within strata scheme is exempt from the requirement of approval by the Western Australian Planning Commission.~~

18 August 1994
Date

Shire / Town Clerk
DELEGATED OFFICER
SECTION 23(5)
STRATA TITLES ACT 1985

Delete if inapplicable

LANDGATE COPY OF ORIGINAL NOT TO SCALE 29/08/2025 12:06 PM Request number: 68687691
Landgate
www.landgate.wa.gov.au

FORM 26

WAPC Ref 911/97. STRATA PLAN NO. 33257

Strata Titles Act 1985
Sections 25 (1), 25 (4)

CERTIFICATE OF GRANT OF APPROVAL BY WESTERN AUSTRALIAN PLANNING COMMISSION TO STRATA PLAN

It is hereby certified that the approval of the Western Australian Planning Commission has been granted pursuant to section 25(1) of the *Strata Titles Act 1985* to -

*(i) the *Strata Plan/plan of re-subdivision/plan of consolidation submitted on 2 August 1997 and relating to the property described below;

*(ii) the sketch submitted on ..... of the proposed *subdivision of ~~the property~~ described below into lots on a ~~Strata Plan/re-~~subdivision/consolidation of the lots on the ~~Strata~~ Plan specified below, subject to the following conditions -

Property Description: Lot (or Strata Plan) No. : 829

Location: Swan Loc. 36

Locality: Victoria Park

Local Government: Town Of Victoria Park

Lodged by: TUSCOM & ASSOCIATES PTY LTD

.....

Date: .....

.....

For Chairman, Western Australian Planning Commission

14 AUG 1997

.....

Date

(*To be deleted as appropriate)

LANDGATE COPY OF ORIGINAL NOT TO SCALE 29/08/2025 12:06 PM Request number: 68687691

Landgate
www.landgate.wa.gov.au

LANDGATE COPY OF ORIGINAL NOT TO SCALE 29/08/2025 12:06 PM Request number: 68687691
www.landgate.wa.gov.au

FORM 8

ANNEXURE.....C.....STRATA / ~~SURVEY - STRATA~~ PLAN NO.....33257 REGISTRAR OF TITLES

SCHEDULE OF DEALINGS ON STRATA/~~SURVEY - STRATA~~ PLAN

Dealings registered or recorded on Strata/~~Survey - Strata~~ Plan	Instrument				Signature of Registrar of Titles
	Nature	Number	Regist'd	Time	
SEE RECORD OF STRATA TITLES SCHEME FOR FURTHER ENDORSEMENTS					

Note: Entries may be affected by subsequent endorsements.

LANDGATE COPY OF ORIGINAL NOT TO SCALE 29/08/2025 12:06 PM Request number: 68687691
www.landgate.wa.gov.au

ANNEXURE.....D.....STRATA / ~~SURVEY - STRATA~~ PLAN NO.....33257 REGISTRAR OF TITLES

SCHEDULE OF ENCUMBRANCES ETC.

Instrument		Particulars	Regist'd	Signature of Registrar of Titles	Cancellation				
Nature	Number				Nature	Number	Regist'd	Time	Signature of Registrar of Titles
		SEE RECORD OF STRATA TITLES SCHEME FOR FURTHER ENDORSEMENTS							

Note: Entries may be affected by subsequent endorsements.

LANDGATE COPY OF ORIGINAL NOT TO SCALE 29/08/2025 12:06 PM Request number: 68687691
www.landgate.wa.gov.au

GOVERNMENT OF WESTERN AUSTRALIA

Landgate

Record of Strata Titles Scheme
Limitations, Interests, Encumbrances and Notifications

Approved Form 2020-27588
Version 3 – 1/07/2020

OFFICE USE ONLY
ANNEXURE C
STRATA PLAN 33257

BGRoberts
REGISTRAR OF TITLES

Document			Cancellation		
Number	Particulars	Date recorded/ lodged/registered	Nature	Number	Registered
P869151	SCHEME NOTICE	29.01.2024			
P910674	SCHEME BY-LAWS	7.3.2024			

Strata Plan 33257

Lot	Certificate of Title	Lot Status	Part Lot
1	2112/601	Registered	
2	2112/602	Registered	
3	2112/603	Registered	
4	2112/604	Registered	
5	2112/605	Registered	
6	2112/606	Registered	
7	2112/607	Registered	
8	2112/608	Registered	
9	2112/609	Registered	
10	2112/610	Registered	
11	2112/611	Registered	
12	2112/612	Registered	
13	2112/613	Registered	
14	2112/614	Registered	
15	2112/615	Registered	
16	2112/616	Registered	
17	2112/617	Registered	
18	2112/618	Registered	
19	2112/619	Registered	
20	2112/620	Registered	
21	2112/621	Registered	
22	2112/622	Registered	
23	2112/623	Registered	
24	2112/624	Registered	
25	2112/625	Registered	
26	2112/626	Registered	
27	2112/627	Registered	
28	2112/628	Registered	
29	2112/629	Registered	
30	2112/630	Registered	
31	2112/631	Registered	
32	2112/632	Registered	
33	2112/633	Registered	
34	2112/634	Registered	
35	2112/635	Registered	
36	2112/636	Registered	
37	2112/637	Registered	
38	2112/638	Registered	
39	2112/639	Registered	
40	2112/640	Registered	
41	2112/641	Registered	
42	2112/642	Registered	
43	2112/643	Registered	
44	2112/644	Registered	
45	2112/645	Registered	

LANDGATE COPY OF ORIGINAL NOT TO SCALE 29/08/2025 12:06 PM Request number: 68687691

Landgate
www.landgate.wa.gov.au

Strata Plan 33257

Lot	Certificate of Title	Lot Status	Part Lot
46	2112/646	Registered	
47	2112/647	Registered	
48	2112/648	Registered	
49	2112/649	Registered	
50	2112/650	Registered	
51	2112/651	Registered	
52	2112/652	Registered	
53	2112/653	Registered	
54	2112/654	Registered	
55	2112/655	Registered	
56	2112/656	Registered	
57	2112/657	Registered	
58	2112/658	Registered	
59	2112/659	Registered	

LANDGATE COPY OF ORIGINAL NOT TO SCALE 29/08/2025 12:06 PM Request number: 68687691

Landgate
www.landgate.wa.gov.au

Attachment 3

REIWA REAL ESTATE INSTITUTE OF WESTERN AUSTRALIA
APPROVED BY THE REAL ESTATE INSTITUTE OF WESTERN AUSTRALIA (INC.)
COPYRIGHT © REIWA 2020
FOR USE BY REIWA MEMBERS
first national REAL ESTATE | Genesis

STRATA TITLES ACT 1985

SCHEDULES

SCHEDULE 1 & SCHEDULE 2 (s39)

Schedule 1 — Governance by-laws

[Heading inserted by No. 30 of 2018 s. 86.]

[Part I heading deleted by No. 58 of 1995 s. 87(1).]

1. Duties of owner

(1) The owner of a lot must —

(a) immediately carry out all work that may be ordered under a written law in respect of the lot other than such work as may be for the benefit of the building generally and pay all rates, taxes, charges, outgoings and assessments that may be payable in respect of the lot;

(b) maintain and repair the lot, and keep it in a state of good condition, reasonable wear and tear, and damage by fire, storm, tempest or act of God excepted.

(1A) The owner of a lot must —

(a) notify in writing the strata company immediately on becoming the owner of the lot, including in the notice the owner's address for service for the purposes of this Act; and

(b) if required in writing by the strata company, notify the strata company of any mortgage or other dealing in connection with the lot, including in the case of a lease of a lot, the name of the lessee and the term of the lease.

[Clause 1 amended by No. 58 of 1995 s. 87(2); No. 14 of 1996 s. 4; No. 74 of 2003 s. 112(15); No. 30 of 2018 s. 87.]

[**2.** Deleted by No. 30 of 2018 s. 88.]

3. Power of strata company regarding submeters

(1) If the supply of gas or electricity to a lot is regulated by means of a submeter, the strata company may require the owner or occupier of the lot to pay the strata company by way of security for the payment of charges arising through the submeter an amount not exceeding $200 and, if any amount so paid is applied by the strata company under sub-bylaw (3), to pay such further amount or amounts by way of such security as may be necessary to maintain the amount of the security as, subject to this sub-bylaw, the strata company may require.

(2) The strata company must lodge every sum received under this by-law to the credit of an interest-bearing ADI account and all interest accruing in respect of amounts so received must, subject to this by-law, be held on trust for the owner or occupier who made the payment.

(3) If the owner or occupier of a lot in respect of which a submeter is used for the supply of gas or electricity refuses or fails to pay any charges due for the supply of gas or electricity to that lot, the strata company may apply in payment of those charges all, or such part as is necessary, of any amount paid to the strata company by that owner or occupier under this by-law, including any interest that may have accrued in respect of that amount.

(4) If a person who has paid an amount under this by-law to a strata company satisfies the strata company that the person is no longer the owner or occupier of a lot and that the strata company no longer has any liability or contingent liability for the supply of gas or electricity to that lot during the period when that person was an owner or occupier of the lot, the strata company must refund to that person the amount then held on the person's behalf under this by-law.

[Clause 3 amended by No. 26 of 1999 s. 104; No. 74 of 2003 s. 112(16); No. 30 of 2018 s. 89.]

4. Constitution of council

(1) The powers and duties of the strata company must, subject to any restriction imposed or direction given at a general meeting, be exercised and performed by the council of the strata company and a meeting of the council at which a quorum is present is competent to exercise all or any of the authorities, functions or powers of the council.

(2) Until the first annual general meeting of the strata company, the owners of all the lots constitute the council.

REIWA REAL ESTATE INSTITUTE OF WESTERN AUSTRALIA
APPROVED BY THE REAL ESTATE INSTITUTE OF WESTERN AUSTRALIA (INC.)
COPYRIGHT © REIWA 2020
FOR USE BY REIWA MEMBERS
first national REAL ESTATE | Genesis

(3) If there are not more than 3 lots in the scheme, the council consists of all of the owners of the lots and, if there are more than 3 lots in the scheme, the council consists of not less than 3 nor more than 7 of the owners of the lots, as is determined by the strata company.

(4) If there are more than 3 lots in the scheme, the members of the council must be elected at each annual general meeting of the strata company or, if the number of lots in the scheme increases to more than 3, at an extraordinary general meeting convened for the purpose.

(6) If there are co-owners of a lot, 1 only of the co-owners is eligible to be, or to be elected to be, a member of the council and the co-owner who is so eligible must be nominated by the co-owners, but, if the co-owners fail to agree on a nominee, the co-owner who owns the largest share of the lot is the nominee or, if there is no co-owner who owns the largest share of the lot, the co-owner whose name appears first in the certificate of title for the lot is the nominee.

(8) Except if the council consists of all the owners of lots in the scheme, the strata company may by special resolution remove any member of the council before the expiration of the member's term of office.

(9) A member of the council vacates office as a member of the council –

(a) if the member dies or ceases to be an owner or co-owner of a lot; or

(b) on receipt by the strata company of a written notice of the member's resignation from the office of member; or

(c) at the conclusion of an annual general meeting of the strata company at which an election of members of the council takes place and at which the member is not elected or re-elected; or

(d) in a case where the member is a member of the council by reason of there being not more than 3 owners of lots in the scheme, on an election of members of the council (as a result of there being an increase in the number of owners to more than 3) at which the member is not elected; or

(e) if the member is removed from office under sub-bylaw (8); or

(f) if the Tribunal orders that the member's appointment is revoked and the member is removed from office.

(10) The remaining members of the council may appoint a person eligible for election to the council to fill a vacancy in the office of a member of the council, other than a vacancy arising under sub-bylaw (9)(c) or (d), and any person so appointed holds office, subject to this by-law, for the balance of the predecessor's term of office.

Note for this sub-bylaw: By-law 6(3A) provides for the filling of vacancies in the offices of chairperson, secretary and treasurer.

(11) Except if 1 person is the owner of all of the lots in the scheme, a quorum of the council is 2 if the council consists of 3 or 4 members; 3, if it consists of 5 or 6 members; and 4, if it consists of 7 members.

(12) The continuing members of the council may act even if there is a vacancy in the council, but so long as the number of members is reduced below the number fixed by these by-laws as the quorum of the council, the continuing members or member of the council may act for the purpose of increasing the number of members of the council or convening a general meeting of the strata company, but for no other purpose.

(13) All acts done in good faith by the council, even if it is afterwards discovered that there was some defect in the appointment or continuance in office of any member of the council, are as valid as if that member had been duly appointed or had duly continued in office.

[Clause 4 amended by No. 30 of 2018 s. 90.]

5. Election of council at general meeting

The procedure for nomination and election of members of a council must be in accordance with the following rules –

(1) The meeting must determine, in accordance with the requirements of by-law 4(3) the number of persons of whom the council is to consist.

(2) The chairperson must call on those persons who are present at the meeting in person or by proxy and entitled to nominate candidates to nominate candidates for election to the council.

(3) A nomination is ineffective unless supported by the consent of the nominee to the nomination, given –

(a) in writing, and furnished to the chairperson at the meeting; or

(b) orally by a nominee who is present at the meeting in person or by proxy.

REIWA REAL ESTATE INSTITUTE OF WESTERN AUSTRALIA
APPROVED BY THE REAL ESTATE INSTITUTE OF WESTERN AUSTRALIA (INC.) COPYRIGHT © REIWA 2020 FOR USE BY REIWA MEMBERS
first national REAL ESTATE | Genesis

(4) When no further nominations are forthcoming, the chairperson –

(a) if the number of candidates equals the number of members of the council determined in accordance with the requirements of by-law 4(3), must declare those candidates to be elected as members of the council;

(b) if the number of candidates exceeds the number of members of the council as so determined, must direct that a ballot be held.

(5) If a ballot is to be held, the chairperson must –

(a) announce the names of the candidates; and

(b) cause to be furnished to each person entitled to vote and present in person or by proxy, a blank form in respect of each lot in respect of which the person is entitled to vote for use as a ballot form.

(6) A person who is entitled to vote must complete a valid ballot form by –

(a) writing on the form the names of candidates, equal in number to the number of members of the council so that no name is repeated; and

(b) indicating on the form the number of each lot in respect of which the person's vote is cast and whether the person so votes as owner or first mortgagee of each such lot or as proxy of the owner or first mortgagee; and

(c) signing the ballot form; and

(d) returning it to the chairperson.

(7) The chairperson, or a person appointed by the chairperson, must count the votes recorded on valid ballot forms in favour of each candidate.

(8) Subject to sub-bylaw (9), candidates, being equal in number to the number of members of the council determined in accordance with by-law 4(3), who receive the highest numbers (in terms of lots or unit entitlements as required under the *Strata Titles Act 1985* section 122) of votes are to be declared elected to the council.

(9) If the number (in terms of lots or unit entitlements as required under the *Strata Titles Act 1985* section 122) of votes recorded in favour of any candidate is the lowest of the numbers of votes referred to in sub-bylaw (8) and –

(a) that number equals the number of votes recorded in favour of any other candidate; and

(b) if each of those candidates were to be declared elected the number of persons elected would exceed the number of persons required to be elected, as between those candidates, the election must be decided by a show of hands of those entitled to vote and present in person or by proxy.

[Clause 5 amended by No. 74 of 2003 s. 112(17)-(19); No. 30 of 2018 s. 91.]

6. Chairperson, secretary and treasurer of council

(1) The members of a council must, at the first meeting of the council after they assume office as such members, appoint a chairperson, a secretary and a treasurer of the council.

(2) A person –

(a) must not be appointed to an office referred to in sub-bylaw (1) unless the person is a member of the council; and

(b) may be appointed to 1 or more of those offices.

(3) A person appointed to an office referred to in sub-bylaw (1) holds office until the first of the following events happens –

(a) the person ceases to be a member of the council under by-law 4(9);

(b) receipt by the strata company of a written notice of the person's resignation from that office;

(c) another person is appointed by the council to hold that office.

(3A) The remaining members of the council must appoint a member of the council to fill a vacancy in an office referred to in sub-bylaw (1), other than a vacancy arising under by-law 4(9)(c) or (d), and any person so appointed holds office, subject to this by-law, for the balance of the predecessor's term of office.

REIWA REAL ESTATE INSTITUTE OF WESTERN AUSTRALIA
APPROVED BY THE REAL ESTATE INSTITUTE OF WESTERN AUSTRALIA (INC.)
COPYRIGHT © REIWA 2020
FOR USE BY REIWA MEMBERS
first national REAL ESTATE | Genesis

(4) The chairperson is to preside at all meetings of the council but, if the chairperson is absent from, or is unwilling or unable to preside at, a meeting, the members of the council present at that meeting can appoint 1 of their number to preside at that meeting during the absence of the chairperson.

[Clause 6 amended by No. 30 of 2018 s. 92.]

7. Chairperson, secretary and treasurer of strata company

(1) Subject to sub-bylaw (2), the chairperson, secretary and treasurer of the council are also respectively the chairperson, secretary and treasurer of the strata company.

(2) A strata company may at a general meeting authorise a person who is not an owner of a lot to act as the chairperson of the strata company for the purposes of that meeting.

(3) A person appointed under sub-bylaw (2) may act until the end of the meeting for which the person was appointed to act.

[Clause 7 inserted by No. 58 of 1995 s. 87(3); amended by No. 74 of 2003 s. 112(20); No. 30 of 2018 s. 93.]

8. Meetings of council

(1) At meetings of the council, all matters must be determined by a simple majority vote.

(2) The council may –

(a) meet together for the conduct of business and adjourn and otherwise regulate its meetings as it thinks fit, but the council must meet when any member of the council gives to the other members not less than 7 days' notice of a meeting proposed by the member specifying in the notice the reason for calling the meeting; or

(b) employ or engage, on behalf of the strata company, any person as it thinks is necessary to provide any goods, amenity or service to the strata company; or (c) subject to any restriction imposed or direction given at a general meeting of the strata company, delegate to 1 or more of its members such of its powers and duties as it thinks fit, and at any time revoke the delegation.

(3) A member of a council may appoint an owner of a lot, or an individual authorised under the *Strata Titles Act 1985* section 136 by a corporation which is the owner of a lot, to act in the member's place as a member of the council at any meeting of the council.

(4) An owner of a lot or individual may be appointed under sub-bylaw (3) whether or not that person is a member of the council.

(5) If a person appointed under sub-bylaw (3) is a member of the council the person may, at any meeting of the council, separately vote in the person's capacity as a member and on behalf of the member in whose place the person has been appointed to act.

[Clause 8 amended by No. 30 of 2018 s. 94.]

9. Powers and duties of secretary of strata company

The powers and duties of the secretary of a strata company include –

(a) the preparation and distribution of minutes of meetings of the strata company and the submission of a motion for confirmation of the minutes of any meeting of the strata company at the next such meeting; and

(b) the giving on behalf of the strata company and of the council of the notices required to be given under the Act; and

(c) the supply of information on behalf of the strata company in accordance with the *Strata Titles Act 1985* sections 108 and 109; and

(d) the answering of communications addressed to the strata company; and

(e) the calling of nominations of candidates for election as members of the council; and

(f) subject to the *Strata Titles Act 1985* sections 127, 128, 129, 200(2)(f) and

(g) the convening of meetings of the strata company and of the council.

[Clause 9 amended by No. 30 of 2018 s. 95.]

REIWA REAL ESTATE INSTITUTE OF WESTERN AUSTRALIA
APPROVED BY THE REAL ESTATE INSTITUTE OF WESTERN AUSTRALIA (INC.)
COPYRIGHT © REIWA 2020
FOR USE BY REIWA MEMBERS
first national REAL ESTATE | Genesis

10. Powers and duties of treasurer of strata company

The powers and duties of the treasurer of a strata company include –

(a) the notifying of owners of lots of any contributions levied under the Strata Titles Act 1985; and

(b) the receipt, acknowledgment and banking of and the accounting for any money paid to the strata company; and

(c) the preparation of any certificate applied for under the *Strata Titles Act 1985* section 110; and

(d) the keeping of the records of account referred to in the *Strata Titles Act 1985* section 101 and the preparation of the statement of accounts referred to in the *Strata Titles Act 1985* section 101.

[Clause 10 amended by No. 30 of 2018 s. 96.]

[**11-15.** Deleted by No. 30 of 2018 s. 97.]

Schedule 2 – Conduct by-laws

[Heading inserted by No. 30 of 2018 s. 98.]

1. Vehicles and parking

(1) An owner or occupier of a lot must take all reasonable steps to ensure that the owner's or occupier's visitors comply with the scheme by-laws relating to the parking of motor vehicles.

(2) An owner or occupier of a lot must not park or stand any motor or other vehicle on common property except with the written approval of the strata company.

[Clause 1 inserted by No. 30 of 2018 s. 99.]

2. Use of common property

An owner or occupier of a lot must –

(a) use and enjoy the common property in such a manner as not unreasonably to interfere with the use and enjoyment of the common property by other owners or occupiers of lots or of their visitors; and

(b) not use the lot or permit it to be used in such manner or for such purpose as causes a nuisance to an occupier of another lot (whether an owner or not) or the family of such an occupier; and

(c) take all reasonable steps to ensure that the owner's or occupier's visitors do not behave in a manner likely to interfere with the peaceful enjoyment of an owner or occupier of another lot or of a person lawfully using common property; and

(d) not obstruct lawful use of common property by any person.

[Clause 2 inserted by No. 30 of 2018 s. 100.]

3. Damage to lawns etc. on common property

Except with the approval of the strata company, an owner or occupier of a lot must not –

(a) damage any lawn, garden, tree, shrub, plant or flower on common property; or

(b) use any portion of the common property for the owner's or occupier's own purposes as a garden.

[Clause 3 amended by No. 30 of 2018 s. 101.]

4. Behaviour of owners and occupiers

An owner or occupier of a lot must be adequately clothed when on common property and must not use language or behave in a manner likely to cause offence or embarrassment to an owner or occupier of another lot or to any person lawfully using common property.

[Clause 4 amended by No. 30 of 2018 s. 102.]

[**5.** Deleted by No. 30 of 2018 s. 103.]

REIWA REAL ESTATE INSTITUTE OF WESTERN AUSTRALIA
APPROVED BY THE REAL ESTATE INSTITUTE OF WESTERN AUSTRALIA (INC.) COPYRIGHT © REIWA 2020 FOR USE BY REIWA MEMBERS
first national REAL ESTATE | Genesis

6. Depositing rubbish etc. on common property

An owner or occupier of a lot must not deposit or throw on that lot or any other lot or the common property any rubbish, dirt, dust or other material likely to interfere with the peaceful enjoyment of an owner or occupier of another lot or of any person lawfully using the common property.

[Clause 6 amended by No. 58 of 1995 s. 88(2); No. 30 of 2018 s. 104.]

7. Drying of laundry items and signage

An owner or occupier of a lot must not, except with the consent in writing of the strata company –

(a) hang any washing, towel, bedding, clothing or other article on any part of the parcel in such a way as to be visible from outside the building, other than for a reasonable period on any lines provided by the strata company for the purpose; or

(b) display any sign, advertisement, placard, banner, pamphlet or like matter on any part of their lot in such a way as to be visible from outside the building.

[Clause 7 amended No. 30 of 2018 s. 105.] [Former By-law 8 repealed by No. 58 of 1995 s. 88(3).]

8. Storage of inflammable liquids etc.

An owner or occupier of a lot must not, except with the written approval of the strata company, use or store on the lot or on the common property any inflammable chemical, liquid or gas or other inflammable material, other than chemicals, liquids, gases or other materials used or intended to be used for domestic purposes, or any such chemical, liquid, gas or other material in a fuel tank of a motor vehicle or internal combustion engine.

[Clause 8, formerly by-law 9, renumbered as by-law 8 by No. 58 of 1995 s. 88(4); amended by No. 30 of 2018 s. 106.]

9. Moving furniture etc. on or through common property

An owner or occupier of a lot must not transport any furniture or large object through or on common property within the building unless that person has first given to the council sufficient notice of their intention to do so to enable the council to arrange for its nominee to be present at the time when that person does so.

[Clause 9, formerly by-law 10, renumbered as by-law 9 by No. 58 of 1995 s. 88(4); amended by No. 30 of 2018 s. 107.]

10. Floor coverings

An owner of a lot must ensure that all floor space within the lot (other than that comprising kitchen, laundry, lavatory or bathroom) is covered or otherwise treated to an extent sufficient to prevent the transmission therefrom of noise likely to disturb the peaceful enjoyment of an owner or occupier of another lot.

[Clause 10, formerly by-law 11, renumbered as by-law 10 by No. 58 of 1995 s. 88(4); amended by No. 30 of 2018 s. 108.]

11. Garbage disposal

An owner or occupier of a lot must –

(a) maintain within their lot, or on such part of the common property as may be authorised by the strata company, in clean and dry condition and adequately covered, a receptacle for garbage;

(b) comply with all local laws relating to the disposal of garbage; (c) ensure that the health, hygiene and comfort of an owner or occupier of any other lot is not adversely affected by their disposal of garbage.

[Clause 11, formerly by-law 12, renumbered as by-law 11 by No. 58 of 1995 s. 88(4); amended by No. 57 of 1997 s. 115(5); No. 30 of 2018 s. 109.]

12. Additional duties of owners and occupiers

An owner or occupier of a lot must not –

(a) use the lot for a purpose that may be illegal or injurious to the reputation of the building; or

(b) make undue noise in or about the lot or common property; or

(c) keep animals on the lot or the common property after notice in that behalf given to that person by the council.

[Clause 12 inserted by No. 58 of 1995 s. 88(5); amended by No. 74 of 2003 s. 112(22); No. 30 of 2018 s. 110.]

REIWA
REAL ESTATE INSTITUTE OF WESTERN AUSTRALIA
APPROVED BY
THE REAL ESTATE INSTITUTE
OF WESTERN AUSTRALIA (INC.)
COPYRIGHT © REIWA 2020
FOR USE BY REIWA MEMBERS
first national REAL ESTATE | Genesis

13. Notice of alteration to lot

An owner of a lot must not alter or permit the alteration of the structure of the lot except as may be permitted and provided for under the Act and the by-laws and in any event must not alter the structure of the lot without giving to the strata company, not later than 14 days before commencement of the alteration, a written notice describing the proposed alteration.

[Clause 13 inserted by No. 58 of 1995 s. 88(5); amended by No. 30 of 2018 s. 111.]

14. Appearance of lot

An owner or occupier of a lot must not, without the written consent of the strata company, maintain within the lot anything visible from outside the lot that, viewed from outside the lot, is not in keeping with the rest of the building.

[Clause 14 inserted by No. 58 of 1995 s. 88(5); amended by No. 30 of 2018 s. 112.]

15. Decoration of, and affixing items to, inner surface of lot

An owner or occupier of a lot must not, without the written consent of the strata company, paint, wallpaper or otherwise decorate a structure which forms the inner surface of the boundary of the lot or affix locking devices, flyscreens, furnishings, furniture, carpets and other similar things to that surface, if that action will unreasonably damage the common property.

[Clause 15 inserted by No. 30 of 2018 s. 113.]

Attachment 4

The Owners of Burswood Gardens
Strata Plan 33257

MINUTES OF THE ANNUAL GENERAL MEETING

HELD AT 138 BURSWOOD ROAD, BURSWOOD ON WEDNESDAY, 13th NOVEMBER 2024 COMMENCING AT 5.30PM

Present:

Mr A Day	Ms L Simons	Ms M Boyd
Mr N Albertini	Ms A Adhikari	Mr G McNiell
Mr E Ler	Ms A Brewis	*Mr R Ong*
Mr E Wolyniec	Mr S Tingay	Ms S Jordan
Ms M Blakiston	*Ms D Hardie*	Ms M Keller
Ms AM Wilson	Mr R Claxton	

Proxies:

Ms K Bevilaqua	(Lot 2)	in favour of the Chairperson
Mr M & Mrs A Moeauri	(Lot 4)	in favour of the Chairperson
Ms A Geneve	(Lot 8)	in favour of the Chairperson
Mr E Pang	(Lot 16)	in favour of the Chairperson
Mr D Williams & Ms Y Kurokawa	(Lot 20)	in favour of the Chairperson
Mr N Albertini & Ms A Leggett	(Lot 26)	in favour of Mr N Albertini
Mr J Smith	(Lot 33)	in favour of the Chairperson
Mr Z S Kee	(Lot 34)	in favour of the Chairperson
Mr E & Ms J & Ms H Phua	(Lot 37)	in favour of Mr E Ler
Mr G & Mrs S Douglas	(Lot 42)	in favour of Mr A Glass
Mr P Dose	(Lot 43)	in favour of the Chairperson
Mr A Kennett & Ms A Brewis	(Lot 45)	in favour of Ms A Brewis
S J Foo & R KS Ong	(Lot 47)	in favour of Mr R Ong
Mr E & Mrs H Wolyniec	(Lot 49)	in favour of Mr E Wolyniec
Mr S & Mrs S Tingay	(Lot 50)	in favour of Mr S Tingay
Ms AM Wilson & Mr R Claxton	(Lot 58)	in favour of Ms AM Wilson

Apologies:

Ms A Geneve	(Lot 8)
Mr G & Mrs S Douglas	(Lot 42)

In Attendance:

Alex Glass representing Richardson Strata Management Services

At 5.30pm, the meeting was advised that a quorum was not present and as per the Strata Titles Act: Section 130 (4), waited the required 30 minutes before opening the meeting at 6:00pm to conduct the following business.

1 Appointment of Chairperson for the Meeting

It was resolved by the meeting that Alex Glass be appointed to act as Chairperson of the Strata Company for the purpose of the meeting.

The following Lots voted in favour of the motion;
2, 4, 5, 8, 9 16, 19, 20, 26, 29, 32, 33, 34, 37, 42, 43, 45, 47, 49, 50, 51, 53, 54, 56 & 58
There were no votes Against.
No Lots Abstained.

The motion was CARRIED.

2 Confirmation of Previous Minutes

(a) On a motion moved by Ms Wilson and seconded by Ms Adhikari it was resolved by the meeting that the previously circulated Minutes of the Annual General Meeting held on 18th January 2024 be confirmed as a true record of proceedings.

The following Lots voted in favour of the motion;
2, 4, 5, 8, 9 16, 19, 20, 26, 29, 32, 33, 34, 37, 42, 43, 45, 47, 49, 50, 51, 53, 54, 56 & 58
There were no votes Against.
No Lots Abstained.

The motion was CARRIED.

(b) There were no matters raised.

3 Consideration of Statement of Accounts

On a motion moved by Ms Wilson and seconded by Mr McNeill it was resolved by the meeting that the Statement of Accounts for the period 1 September 2023 to 31 August 2024 showing an amount of **$202,305.14** net owners' funds be adopted as presented.

The following Lots voted in favour of the motion;
2, 4, 5, 8, 9 16, 19, 20, 26, 29, 32, 33, 34, 37, 42, 43, 45, 47, 49, 50, 51, 53, 54, 56 & 58
There were no votes Against.
No Lots Abstained.

The motion was CARRIED.

4 Annual Report of Council

On a motion moved by Ms Brewis and seconded by Ms Adhikari it was resolved by the meeting that the annual report of the Council be received and incorporated into the records of the Strata Company.

The following Lots voted in favour of the motion;
2, 4, 5, 8, 9 16, 19, 20, 26, 29, 32, 33, 34, 37, 42, 43, 45, 47, 49, 50, 51, 53, 54, 56 & 58
There were no votes Against.
No Lots Abstained.

The motion was CARRIED.

5 Insurance

(a) On a motion moved by Ms Simons and seconded by Ms Wilson it was resolved by the meeting that copies of the current certificates and schedules for the insurance required under Section 127 (3)(c) of the Act and managers disclosures, as tabled, be received and incorporated into the records of the Strata Company.

And,

(b) That the Lync Insurance Brokers Financial Services Guide and Strata Community Insurance Product Disclosure Statement as tabled by received and incorporated into the records of the Strata Company.

And,

(c) That the Council be directed to renew the insurance policy prior to its expiry date in such sums as are suggested by the insurer or as are recommended by qualified professional advisors.

The following Lots voted in favour of the motion;
2, 4, 5, 8, 9 16, 19, 20, 26, 29, 32, 33, 34, 37, 42, 43, 45, 47, 49, 50, 51, 53, 54, 56 & 58
There were no votes Against.
No Lots Abstained.

The motion was CARRIED.

6 Constitution of the Council

On a motion moved by Ms Boyd and seconded by Ms Brewis it was resolved by the meeting that the Council of the Strata Company consists of seven (7) proprietors.

The following Lots voted in favour of the motion;
2, 4, 5, 8, 9 16, 19, 20, 26, 29, 32, 33, 34, 37, 42, 43, 45, 47, 49, 50, 51, 53, 54, 56 & 58
There were no votes Against.
No Lots Abstained.

The motion was CARRIED.

The following nominations were received;

Mr R Claxton	Ms A Adhikari
Ms M Blakiston	Ms D Hardie
Ms A Brewis	Ms L Simons
Mr N Albertini	

As no further nominations were received the Chairperson declared all those nominated as the duly elected members of the Council of the Strata Company.

Special Business

7 10 Year Plan – Acknowledge

On a motion moved by Ms Boyd and seconded by Ms Adhikari it was resolved by the meeting that the Strata Company acknowledges receipt of the 10-year plan as required by the Act which can be found on the owners portal.

The following Lots voted in favour of the motion;
2, 4, 5, 8, 9 16, 19, 20, 26, 29, 32, 33, 34, 37, 42, 43, 45, 47, 49, 50, 51, 53, 54, 56 & 58
There were no votes Against.
No Lots Abstained.

The motion was CARRIED.

8 Budget of Estimated Expenditure – Administrative Fund

On a motion moved by Ms Adhikari and seconded by Mr Albertini it was resolved by the meeting that the Budget of Estimated Expenditure from the Administrative Fund for the period 1 September 2024 to 31 August 2025 amounting to **$254,448.80 (**exclusive of GST) be adopted as presented.

The following Lots voted in favour of the motion;
2, 4, 5, 8, 9 16, 19, 20, 26, 29, 32, 33, 34, 37, 42, 43, 45, 47, 49, 50, 51, 53, 54, 56 & 58
There were no votes Against.
No Lots Abstained.

The motion was CARRIED.

9 Determination of Levies – Administrative Fund

On a motion moved by Ms Wilson and seconded by Ms Simons it was resolved by the meeting that that the Levy of Contributions in the financial year to raise a total of **$260,000.00** (inclusive of GST), on proprietors for the Administrative Fund be payable in advance, by instalments due and payable in the amounts and on the dates as shown below;

$7.242	per unit entitlement	1 November
$6.129	per unit entitlement	1 February
$6.129	per unit entitlement	1 May
$6.50	per unit entitlement	1 August

With the amount to remain at $6.50 per unit of entitlement per quarter until otherwise determined by a future general meeting of the Strata Company.

The following Lots voted in favour of the motion;
2, 4, 5, 8, 9 16, 19, 20, 26, 29, 32, 33, 34, 37, 42, 43, 45, 47, 49, 50, 51, 53, 54, 56 & 58
There were no votes Against.
No Lots Abstained.

The motion was CARRIED.

10 Budget of Estimated Expenditure – Reserve Fund

On a motion moved by Mr McNeill and seconded by Ms Blakiston it was resolved by the meeting that the Budget of Estimated Expenditure from the Reserve Fund for the period 1 September 2024 to 31 August 2025 amounting to **$47,000.00 (**exclusive of GST) be adopted as presented.

The following Lots voted in favour of the motion;
2, 4, 5, 8, 9 16, 19, 20, 26, 29, 32, 33, 34, 37, 42, 43, 45, 47, 49, 50, 51, 53, 54, 56 & 58
There were no votes Against.
No Lots Abstained.

The motion was CARRIED.

11 Determination of Levies – Reserve Fund

On a motion moved by Ms Adhikari and seconded by Mr Albertini it was resolved by the meeting that that the Levy of Contributions in the financial year to raise a total of **$70,000.00** (inclusive of GST), on proprietors for the Reserve Fund be payable in advance, by instalments due and payable in the amounts and on the dates as shown below;

$1.394	per unit entitlement	1 November
$1.928	per unit entitlement	1 February
$1.928	per unit entitlement	1 May
$1.750	per unit entitlement	1 August

With the amount to remain at $1.750 per unit of entitlement per quarter until otherwise determined by a future general meeting of the Strata Company.

The following Lots voted in favour of the motion;
2, 4, 5, 8, 9 16, 19, 20, 26, 29, 32, 33, 34, 37, 42, 43, 45, 47, 49, 50, 51, 53, 54, 56 & 58
There were no votes Against.
No Lots Abstained.

The motion was CARRIED.

12 Matters without notice for discussion and referral to the Council

Pet By-Law

The meeting requested clarification on the relevant pet by-law and Mr Glass confirmed that he would send the by-law through to the Council for their information.

Nuisance

Ms Boyd queried what the Strata Titles Act was referring to with the 'nuisance' by-laws and what exactly constituted a nuisance for any residents.

Mr Glass advised this was often open to interpretation, but it was mostly used in the context of noise complaints.

Insurance Coverage

The meeting questioned whether owners/residents would be covered under the Strata Company insurance policy if doing work for the property onsite.

Mr Glass advised he would need to check this with the insurer as there was a question regarding paid or volunteer work and if this covered owners or residents within the scheme.

It was agreed that Richardson Strata would confirm this with the insurer and advise the Council accordingly.

Black Stains Removed

The meeting confirmed the black stains on the bricks had been removed and the building is looking great as a result.

Upcoming Works

Mr Claxton spoke to the meeting regarding the various proposed upcoming works the Council is looking at including;

a) making bin areas accessible from within the complex.
b) steps to resolve gate noise when opening/closing.
c) moving block 11 gate closer to the road for internal access to the visitor bays.
d) the reactivation of the security shutters for the mailboxes.

20 Close of meeting

There being no further business to discuss the Chairperson declared the meeting closed at 6.32pm

Richardson Strata Management Services

138 Burswood Road
Burswood WA 6100

Telephone: 9472 1833
Facsimile: 9355 5299

Attachment 5

Balance Sheet

Financial Period
01/09/2023 - 31/08/2024

33257
7-11 Heirisson Way VICTORIA PARK

	Administrative Fund	Reserve Fund	TOTAL
ASSETS			
Cash at Bank	53,653.10	151,784.53	205,437.63
Levies Receivable	6,004.36	1,263.77	7,268.13
Total Assets	**59,657.46**	**153,048.30**	**212,705.76**
LIABILITIES			
Levies Paid in Advance	853.82	0.00	853.82
GST Liabilities	2,887.60	0.00	2,887.60
Accounts Payable	6,659.20	0.00	6,659.20
Total Liabilities	**10,400.62**	**0.00**	**10,400.62**
Net Assets	**49,256.84**	**153,048.30**	**202,305.14**
OWNERS FUNDS			
Opening Balance	18,925.26	74,861.86	93,787.12
Surplus / Deficit for the period	30,331.58	78,186.44	108,518.02
Closing Balance	49,256.84	153,048.30	202,305.14
Total Owners Funds	**49,256.84**	**153,048.30**	**202,305.14**

Report Date: 20th September 2024

Richardson Strata Management Services

138 Burswood Road
Burswood WA 6100

Telephone: 9472 1833
Facsimile: 9355 5299

Income & Expenditure Summary

Financial Period
01/09/2023 - 31/08/2024

33257
7-11 Heirisson Way VICTORIA PARK
Administrative Fund

	Actual 01/09/23 - 31/08/24	Budget 01/09/23 - 31/08/24	Actual 01/09/22 - 31/08/23
Income			
Debt Collection Recoveries			
Debt Collection Recoveries	$1,388.18	$0.00	$0.00
Interest			
Interest On Levy Arrears	$634.64	$0.00	$0.00
Interest On Levy Arrears (Special Levy - Shortfall Fund)	$153.91	$0.00	$0.00
Levy Income			
Levies Due	$254,510.51	$254,509.09	$0.00
Other Income			
Security Remote / Tag Purchase	$889.21	$0.00	$0.00
Rental Income 1	$14,496.51	$14,850.00	$0.00
Status Certificate Fees*	$2,800.00	$0.00	$0.00
Electricity WA Govt Rebate	$350.00	$0.00	$0.00
Unknown Deposit	$500.00	$0.00	$0.00
Total Income	**$275,722.96**	**$269,359.09**	**$0.00**
Expenses			
Accounting, Taxation & Banking			
BAS / GST Preparation	$200.00	$1,100.00	$0.00
Income Tax	$3,639.30	$620.00	$0.00
Accounting	$200.00	$0.00	$0.00
Building Administration			
Management Fees - Standard	$18,024.98	$18,025.00	$0.00
Management Fees - Non Standard	$1,200.00	$1,000.00	$0.00
Meeting Fee	$494.00	$500.00	$0.00
Telephone / Internet Line	$553.16	$720.00	$0.00
Postage & Petties	$139.39	$0.00	$0.00
Debt Collection	$1,388.18	$0.00	$0.00
Portal Access	$200.00	$300.00	$0.00
Creditor Compliance	$200.00	$300.00	$0.00
Key Register	$33.33	$0.00	$0.00
Building General			
Gym Equipment	$315.00	$500.00	$0.00
Consultants Reports	$2,400.00	$4,000.00	$0.00
Cleaning Contract			
Cleaning Contract	$49,066.00	$49,860.00	$0.00
Electrical			
Electrical - General	$5,361.76	$8,250.00	$0.00
Fire Control			
Fire Protection	$9,490.00	$3,450.00	$0.00
Garden & Grounds			
Lawns & Gardens	$4,672.41	$5,000.00	$0.00

Richardson Strata Management Services
138 Burswood Road
Burswood WA 6100
Telephone: 9472 1833
Facsimile: 9355 5299

Income & Expenditure Summary

Financial Period
01/09/2023 - 31/08/2024

33257
7-11 Heirisson Way VICTORIA PARK
Administrative Fund

	Actual 01/09/23 - 31/08/24	Budget 01/09/23 - 31/08/24	Actual 01/09/22 - 31/08/23
Insurance			
Premiums	$55,870.10	$93,000.00	$0.00
Valuation	$757.77	$0.00	$0.00
Insurance - Annual Management Fee	$4,500.00	$4,500.00	$0.00
Legal & Professional Services			
Consolidation Of By-Laws	$1,183.00	$990.00	$0.00
Lift Maintenance Contract			
Lift Contract	$13,049.26	$13,400.00	$0.00
Maintenance & Repairs			
General Repairs	$12,558.21	$12,800.00	$0.00
Pumps	$3,747.85	$3,100.00	$0.00
Other			
WHS Report	$916.64	$0.00	$0.00
Pest Control			
Pest Control*	$1,400.00	$1,000.00	$0.00
Plumbing			
Plumbing & Drainage	$2,457.81	$9,000.00	$0.00
Pool Area, Gym & General Amenities Contract			
Pool Service	$7,028.69	$6,400.00	$0.00
Security & Intercom			
Security Gates	$2,394.58	$2,400.00	$0.00
Security Surveillance Equipment	$0.00	$1,000.00	$0.00
Electricity			
Electricity*	$14,982.33	$14,400.00	$0.00
Water			
Water Consumption*	$23,327.63	$24,000.00	$0.00
Miscellaneous			
Status Certificate Fees Paid	$3,640.00	$0.00	$0.00
Total Expenses	**$245,391.38**	**$279,615.00**	**$0.00**
Surplus / Deficit	**$30,331.58**	**($10,255.91)**	**$0.00**
Opening Administrative Balance	$18,925.26	$18,925.26	$0.00
Administrative Fund Balance	**$49,256.84**	**$8,669.35**	**$0.00**

Report Date: 20th September 2024

Richardson Strata Management Services
138 Burswood Road
Burswood WA 6100
Telephone: 9472 1833
Facsimile: 9355 5299

Income & Expenditure Summary

Financial Period
01/09/2023 - 31/08/2024

33257
7-11 Heirisson Way VICTORIA PARK
Reserve Fund

	Actual 01/09/23 - 31/08/24	Budget 01/09/23 - 31/08/24	Actual 01/09/22 - 31/08/23
Income			
Interest			
Interest On Levy Arrears	$181.50	$0.00	$0.00
Interest On Bank Deposits	$485.41	$0.00	$0.00
Levy Income			
Levies Due	$48,018.28	$48,018.18	$0.00
Special Levy			
Special Levy	$62,001.25	$62,000.00	$0.00
Total Income	**$110,686.44**	**$110,018.18**	**$0.00**
Expenses			
Building General			
Waterproofing	$32,500.00	$50,000.00	$0.00
Total Expenses	**$32,500.00**	**$50,000.00**	**$0.00**
Surplus / Deficit	**$78,186.44**	**$60,018.18**	**$0.00**
Opening Reserve Balance	$74,861.86	$74,861.86	$0.00
Reserve Fund Balance	**$153,048.30**	**$134,880.04**	**$0.00**

Richardson Strata Management Services
138 Burswood Road
Burswood WA 6100
Telephone: 9472 1833
Facsimile: 9355 5299

Income and Expenditure

Financial Period
01/09/2023 - 31/08/2024

33257
7-11 Heirisson Way VICTORIA PARK

ADMINISTRATIVE FUND OTHER INCOME

Date	Ref.	Payee	Details	Amt.	Bal.
Debt Collection Recoveries					
16/02/24	lot 6		lot 6-Debt Recovery Stage 2 - Levy Notice	$30.00	$30.00
16/02/24	lot 22		lot 22-Debt Recovery Stage 2 - Levy Notice	$30.00	$60.00
16/02/24	lot 25		lot 25-Debt Recovery Stage 2 - Levy Notice	$30.00	$90.00
16/02/24	lot 44		lot 44-Debt Recovery Stage 2 - Levy Notice	$30.00	$120.00
18/03/24	lot 8		lot 8-Debt Recovery Stage 2 - Levy Notice	$30.00	$150.00
18/03/24	lot 28		lot 28-Debt Recovery Stage 2 - Levy Notice	$30.00	$180.00
18/03/24	lot 29		lot 29-Debt Recovery Stage 2 - Levy Notice	$30.00	$210.00
18/03/24	lot 39		lot 39-Debt Recovery Stage 2 - Levy Notice	$30.00	$240.00
18/03/24	lot 48		lot 48-Debt Recovery Stage 2 - Levy Notice	$30.00	$270.00
18/03/24	lot 52		lot 52-Debt Recovery Stage 2 - Levy Notice	$30.00	$300.00
18/03/24	lot 57		lot 57-Debt Recovery Stage 2 - Levy Notice	$30.00	$330.00
18/03/24	lot 22		lot 22-Debt Recovery Stage 3 - Levy Notice	$60.00	$390.00
18/03/24	lot 25		lot 25-Debt Recovery Stage 3 - Levy Notice	$60.00	$450.00
18/03/24	lot 44		lot 44-Debt Recovery Stage 3 - Levy Notice	$60.00	$510.00
17/04/24	lot 6		lot 6-Debt Recovery Stage 3 - Levy Notice	$60.00	$570.00
17/04/24	lot 48		lot 48-Debt Recovery Stage 3 - Levy Notice	$60.00	$630.00
17/04/24	lot 22		lot 22-Debt Recovery Stage 4 - Levy Notice	$90.00	$720.00
17/04/24	lot 44		lot 44-Debt Recovery Stage 4 - Levy Notice	$90.00	$810.00
16/05/24	lot 6		lot 6-Debt Recovery Stage 4 - Levy Notice	$90.00	$900.00
16/05/24	lot 48		lot 48-Debt Recovery Stage 4 - Levy Notice	$90.00	$990.00
16/05/24	lot 22		lot 22-Debt Recovery Stage 5 - Levy Notice	$109.09	$1,099.09
19/06/24	lot 24		lot 24-Debt Recovery Stage 2 - Levy Notice	$30.00	$1,129.09
19/06/24	lot 25		lot 25-Debt Recovery Stage 2 - Levy Notice	$30.00	$1,159.09
19/06/24	lot 29		lot 29-Debt Recovery Stage 2 - Levy Notice	$30.00	$1,189.09
19/06/24	lot 52		lot 52-Debt Recovery Stage 2 - Levy Notice	$30.00	$1,219.09
19/06/24	lot 54		lot 54-Debt Recovery Stage 2 - Levy Notice	$30.00	$1,249.09
19/06/24	lot 8		lot 8-Debt Recovery Stage 2 - Levy Notice	$30.00	$1,279.09
19/06/24	lot 48		lot 48-Debt Recovery Stage 5 - Levy Notice	$109.09	$1,388.18
			Total Debt Collection Recoveries	**$1,388.18**	
Electricity WA Govt Rebate					
30/07/24			Electricity Rebate 23 May -23 Jul24	$350.00	$350.00
			Total Electricity WA Govt Rebate	**$350.00**	
Interest On Levy Arrears					
13/12/23			Opening balance	$301.48	$301.48
18/03/24	lot 28		lot 28-BPay Payment: DEFT Bpay 0000017898	$11.95	$313.43
19/03/24	lot 25		lot 25-BPay Payment: DEFT Bpay 0000017895	$15.19	$328.62
21/03/24	lot 29		lot 29-DEFT I/Tfr: DEFT I/CCd AX 000001789	$13.33	$341.95
22/04/24	lot 18		lot 18-DEFT I/CCd: DEFT I/Tfr 0000017888	$12.76	$354.71
23/04/24	lot 44		lot 44-BPay Payment: DEFT Bpay 0000017914	$23.86	$378.57
26/04/24	lot 8		lot 8-DEFT I/Tfr: DEFT I/CCd VI 000001787	$3.44	$382.01
17/05/24	lot 6		lot 6-BPay Payment: DEFT Bpay 0000017876	$17.41	$399.42
17/05/24	lot 56		lot 56-BPay Payment: DEFT Bpay 0000017926	$11.25	$410.67
20/05/24	lot 22		lot 22-BPay Payment: DEFT Bpay 0000017892	$33.78	$444.45

Richardson Strata Management Services
138 Burswood Road
Burswood WA 6100
Telephone: 9472 1833
Facsimile: 9355 5299

Income and Expenditure

Financial Period
01/09/2023 - 31/08/2024

33257
7-11 Heirisson Way VICTORIA PARK

19/06/24	lot 54		lot 54-BPay Payment: DEFT Bpay 0000017924	$37.86	$482.31
20/06/24	lot 52		lot 52-BPay Payment: DEFT Bpay 0000017922	$17.89	$500.20
21/06/24	lot 24		lot 24-BPay Payment: DEFT Bpay 0000017894	$18.25	$518.45
21/06/24	lot 8		lot 8-DEFT I/Tfr: DEFT I/CCd VI 000001787	$3.58	$522.03
28/06/24	lot 25		lot 25-BPay Payment: DEFT Bpay 0000017895	$23.55	$545.58
28/06/24	lot 48		lot 48-BPay Payment: DEFT Bpay 0000017918	$47.54	$593.12
28/06/24	lot 48		lot 48-BPay Payment: DEFT Bpay 0000017918	$24.41	$617.53
01/08/24	lot 29		lot 29-BPay Payment: DEFT Bpay 0000017899	$17.11	$634.64
			Total Interest On Levy Arrears	**$634.64**	

Rental Income

02/02/24			Show in correct code	-$2,686.36	-$2,686.36
			Total Rental Income	**-$2,686.36**	

Rental Income 1

22/01/24			Acton Belle Strata - Caretaker	$1,461.00	$1,461.00
01/02/24	Bourkes Real Estate Agency		Deposit: Bourkes Bourkes	$1,829.00	$3,290.00
02/02/24			Show in correct code	$2,686.36	$5,976.36
01/03/24	Bourkes Real Estate Agency		Deposit: Bourkes Bourkes	$973.00	$6,949.36
02/04/24	Bourkes Real Estate Agency		Deposit: Bourkes Bourkes	$1,461.00	$8,410.36
01/05/24			Deposit: Bourkes Bourkes	$1,829.00	$10,239.36
04/06/24	Bourkes Real Estate Agency		Deposit: Bourkes Bourkes	$1,373.00	$11,612.36
01/07/24	Bourkes Real Estate Agency		Deposit: Bourkes Bourkes	$1,055.15	$12,667.51
01/08/24	Bourkes Real Estate Agency		Deposit: Bourkes Bourkes	$1,829.00	$14,496.51
			Total Rental Income 1	**$14,496.51**	

Security Remote / Tag Purchase

04/03/24	lot 27		lot 27-Security Fob/Key - Pedestrian Gate	$23.55	$23.55
04/03/24	lot 23		lot 23-Security Fob/Key - Pedestrian Gate	$23.55	$47.10
06/03/24	lot 7		lot 7-Security Fob/Key - Pedestrian Gate	$23.55	$70.65
06/03/24	lot 5		lot 5-Security Fob/Key - Pedestrian Gate	$23.55	$94.20
20/03/24	lot 7		lot 7-Security Fob/Key - Remote #1218	$90.91	$185.11
21/03/24	lot 7		lot 7-Security Fob/Key - Remote N0003AB5C	$90.91	$276.02
28/03/24	lot 5		lot 5-Security Fob/Key - Remote no. N0003	$90.91	$366.93
28/03/24	lot 5		lot 5-Security Fob/Key - Key no. HWF354	$23.55	$390.48
09/04/24	lot 25		lot 25-Security Fob/Key - Remote N0003AB67	$90.91	$481.39
10/06/24	lot 10		lot 10-Security Fob/Key - FOB 000233 & Key	$62.64	$544.03
18/06/24	lot 49		lot 49-Security Fob/Key - HW-353	$23.55	$567.58
24/06/24	lot 10		lot 10-Security Fob/Key - Gym Key & Remote	$98.18	$665.76
08/07/24	lot 45		lot 45-Security Fob/Key - Remote #1276 and	$114.45	$780.21
06/08/24	lot 30		lot 30-Security Fob/Key - Fob #000235	$39.09	$819.30
08/08/24	lot 1		lot 1-Security Fob/Key - FOB No. 000231,	$69.91	$889.21
			Total Security Remote / Tag Purchase	**$889.21**	

Status Certificate Fees*

13/12/23			Opening balance	$1,120.00	$1,120.00
21/12/23	Dunsborough Settlements		Deposit: Sec110 L31 DUNSB SE	$280.00	$1,400.00
03/01/24	Katie Byrne Settlements		Sect 110 - Lot 26	$280.00	$1,680.00

Richardson Strata Management Services
138 Burswood Road
Burswood WA 6100
Telephone: 9472 1833
Facsimile: 9355 5299

Income and Expenditure

Financial Period
01/09/2023 - 31/08/2024

33257
7-11 Heirisson Way VICTORIA PARK

22/01/24		Section 110 Fee Lot 53-Acton Belle	$280.00	$1,960.00
19/03/24	Settle Wise Conveyancing	Deposit: SEC110 L30 SettleWi	$280.00	$2,240.00
15/05/24	Bellmac Settlements	Deposit: SEC110 L39 BELLMACBELLMAC	$280.00	$2,520.00
06/06/24	Apple Settlements	Deposit: Sec 110 L 50 NULINK P	$280.00	$2,800.00
		Total Status Certificate Fees*	**$2,800.00**	

Unknown Deposit

03/01/24		Deposit	$500.00	$500.00
		Total Unknown Deposit	**$500.00**	
		Total Administrative Other Income	**$18,372.18**	

ADMINISTRATIVE FUND EXPENSES

Date	Ref.	Payee	Details	Amt.	Bal.
Accounting					
26/04/24	294706	Richardson Strata Management	Assisting SC Accountant with 2023 Tax Return	$100.00	$100.00
07/05/24	296317	Strata Tax Compliance Pty Ltd	2023 Tax Return	$100.00	$200.00
			Total Accounting	**$200.00**	
BAS / GST Preparation					
22/03/24	291031	Strata Tax Compliance Pty Ltd	BAS Lodgement - Oct 2023 to Dec 2023	$50.00	$50.00
01/05/24	295632	Richardson Strata Management	BAS Jan-Mar24	$100.00	$150.00
17/07/24	304906	Richardson Strata Management	BAS Apr-Jun24	$100.00	$250.00
23/08/24	Refund	Richardson Strata Management	Deposit: Refund PO 291031	-$50.00	$200.00
			Total BAS / GST Preparation	**$200.00**	
Cleaning Contract					
13/12/23			Opening balance	$12,600.00	$12,600.00
22/12/23	281549	Grants Residential Services	Cleaning and Caretaking Duties - 11/12/23 to 24/11/23	$1,800.00	$14,400.00
04/01/24	282576	Grants Residential Services	Rubbish removal & disposal - 31/12/24	$250.00	$14,650.00
05/01/24	282620	Grants Residential Services	Cleaning & caretaking duties - 25/12/23 to 07/01/24	$1,800.00	$16,450.00
19/01/24	283877	Grants Residential Services	Cleaning and caretaking duties - 08/01/24 to 21/01/24	$1,800.00	$18,250.00
02/02/24	285648	Grants Residential Services	Cleaning and caretaking duties - 22/01/24 to 04/02/24	$1,800.00	$20,050.00
08/02/24	286187	Grants Residential Services	Cleaning & Caretaking duties - 27/11/23 to 10/12/23	$1,800.00	$21,850.00
16/02/24	287048	Grants Residential Services	Cleaning and caretaking duties - 5/2/24 to 18/2/24	$1,800.00	$23,650.00
01/03/24	288751	Grants Residential Services	Cleaning & Caretaking duties - 19/02/24 to 03/03/24	$1,800.00	$25,450.00
15/03/24	290168	Grants Residential Services	Cleaning and Caretaking Duties - 04/03/24 to 17/03/24	$1,800.00	$27,250.00
02/04/24	292179	Grants Residential Services	Cleaning & caretaking duties - 1/03/24 to 31/03/24	$1,800.00	$29,050.00

Richardson Strata Management Services
138 Burswood Road
Burswood WA 6100
Telephone: 9472 1833
Facsimile: 9355 5299

Income and Expenditure

Financial Period
01/09/2023 - 31/08/2024

33257
7-11 Heirisson Way VICTORIA PARK

12/04/24	293319	Grants Residential Services	Cleaning & caretaking duties - 01/04/24 to 14/04/24	$1,800.00	$30,850.00
26/04/24	294736	Grants Residential Services	Cleaning and caretaking duties - 15/04/24 to 28/04/24	$1,800.00	$32,650.00
10/05/24	296633	Grants Residential Services	Cleaning and caretaking duties - 29/04/24 to 12/05/24	$1,800.00	$34,450.00
24/05/24	298063	Grants Residential Services	Cleaning and caretaking duties - 13/05/24 to 26/05/24	$1,800.00	$36,250.00
07/06/24	300038	Grants Residential Services	Cleaning and caretaking duties - 27/05/24 to 09/06/24	$1,800.00	$38,050.00
21/06/24	301618	Grants Residential Services	Cleaning and caretaking duties - 10/06/24 to 23/06/24	$1,800.00	$39,850.00
05/07/24	303681	Grants Residential Services	Cleaning & caretaking duties - 24/06/24 to 07/07/24	$1,800.00	$41,650.00
19/07/24	305062	Grants Residential Services	Cleaning and caretaking duties - 08/07/24 to 21/07/24	$1,800.00	$43,450.00
02/08/24	306955	Grants Residential Services	Cleaning and caretaking duties - 22/07/24 to 04/08/24	$1,872.00	$45,322.00
16/08/24	308243	Grants Residential Services	Cleaning and caretaking duties - 05/08/24 to 18/08/24	$1,872.00	$47,194.00
30/08/24	309750	Grants Residential Services	Cleaning & caretaking duties - 19/08/24 to 01/09/24	$1,872.00	$49,066.00
			Total Cleaning Contract	**$49,066.00**	

Consolidation Of By-Laws

29/02/24	288282	Landgate	Lodgement of Consolidation Of By-Laws 18.01.24	$203.00	$203.00
13/03/24	289984	Richardson Strata Management	Consolidation of By-laws	$200.00	$403.00
13/03/24	312182	Richardson Strata Management	Consolidation Of By-Laws - undercharged	$700.00	$1,103.00
12/04/24	293302	Richardson Strata Management	S/Plan & By-laws	$80.00	$1,183.00
			Total Consolidation Of By-Laws	**$1,183.00**	

Consultants Reports

26/08/24	309962	Lalli Consulting Engineers	Structural Inspection & Report - 26/08/24	$2,400.00	$2,400.00
			Total Consultants Reports	**$2,400.00**	

Creditor Compliance

28/12/23	281718	Richardson Strata Management	8x months - Creditor compliance	$200.00	$200.00
			Total Creditor Compliance	**$200.00**	

Debt Collection

21/02/24	287456	Richardson Strata Management	Levy Notice on 15/02/2024	$30.00	$30.00
21/02/24	287456	Richardson Strata Management	Levy Notice on 15/02/2024	$30.00	$60.00
21/02/24	287456	Richardson Strata Management	Levy Notice on 15/02/2024	$30.00	$90.00
21/02/24	287456	Richardson Strata Management	Levy Notice on 15/02/2024	$30.00	$120.00
21/03/24	290933	Richardson Strata Management	Levy Notice on 15/03/2024	$30.00	$150.00
21/03/24	290933	Richardson Strata Management	Levy Notice on 15/03/2024	$30.00	$180.00
21/03/24	290933	Richardson Strata Management	Levy Notice on 15/03/2024	$30.00	$210.00
21/03/24	290933	Richardson Strata Management	Levy Notice on 15/03/2024	$30.00	$240.00
21/03/24	290933	Richardson Strata Management	Levy Notice on 15/03/2024	$30.00	$270.00
21/03/24	290933	Richardson Strata Management	Levy Notice on 15/03/2024	$30.00	$300.00

Richardson Strata Management Services
138 Burswood Road
Burswood WA 6100
Telephone: 9472 1833
Facsimile: 9355 5299

33257
7-11 Heirisson Way VICTORIA PARK

21/03/24	290933	Richardson Strata Management	Levy Notice on 15/03/2024	$30.00	$330.00
21/03/24	290933	Richardson Strata Management	Levy Notice on 15/03/2024	$60.00	$390.00
21/03/24	290933	Richardson Strata Management	Levy Notice on 15/03/2024	$60.00	$450.00
21/03/24	290933	Richardson Strata Management	Levy Notice on 15/03/2024	$60.00	$510.00
18/04/24	294020	Richardson Strata Management	Levy Notice on 16/04/2024	$60.00	$570.00
18/04/24	294020	Richardson Strata Management	Levy Notice on 16/04/2024	$60.00	$630.00
18/04/24	294020	Richardson Strata Management	Levy Notice on 16/04/2024	$90.00	$720.00
18/04/24	294020	Richardson Strata Management	Levy Notice on 16/04/2024	$90.00	$810.00
17/05/24	297498	Richardson Strata Management	Levy Notice on 16/05/2024	$90.00	$900.00
17/05/24	297498	Richardson Strata Management	Levy Notice on 16/05/2024	$109.09	$1,009.09
17/05/24	297498	Richardson Strata Management	Levy Notice on 16/05/2024	$90.00	$1,099.09
20/06/24	301473	Richardson Strata Management	Levy Notice on 17/06/2024	$30.00	$1,129.09
20/06/24	301473	Richardson Strata Management	Levy Notice on 17/06/2024	$30.00	$1,159.09
20/06/24	301473	Richardson Strata Management	Levy Notice on 17/06/2024	$30.00	$1,189.09
20/06/24	301473	Richardson Strata Management	Levy Notice on 17/06/2024	$30.00	$1,219.09
20/06/24	301473	Richardson Strata Management	Levy Notice on 17/06/2024	$30.00	$1,249.09
20/06/24	301473	Richardson Strata Management	Levy Notice on 17/06/2024	$30.00	$1,279.09
20/06/24	301473	Richardson Strata Management	Levy Notice on 17/06/2024	$109.09	$1,388.18
			Total Debt Collection	**$1,388.18**	

Electrical - General

13/12/23			Opening balance	$578.16	$578.16
20/12/23	281580	Temperature Solutions	Checked AC found outdoor fan motor burnt out, faulty outdoor PC Board - 07/12/23	$380.00	$958.16
05/02/24	285914	Universal Electro Tech	Accessed the programming menu for the intercom door station - 05/02/24	$185.00	$1,143.16
05/02/24	285922	Dacs Air Conditioning And Electrical Services	Supply and Installation 1 x Daikin FTXV71WVMA Cora Inverter Split System - 05/02/24	$2,718.18	$3,861.34
21/02/24	287572	Universal Electro Tech	Removed and replace globes - 21/12/23	$795.42	$4,656.76
28/03/24	291654	Universal Electro Tech	U 302 - Button on the door station did not make the handset ring -14/03/24	$435.00	$5,091.76
04/06/24	299691	Grants Residential Services	Globes LED - 31/05/24	$270.00	$5,361.76
			Total Electrical - General	**$5,361.76**	

Electricity*

13/12/23			Opening balance	$4,645.23	$4,645.23
24/01/24	284169	Synergy	Electricity charges from 17/11/23 to 22/01/24	$94.98	$4,740.21
24/01/24	284181	Synergy	Electricity charges from 17/11/23 to 22/01/24	$2,073.50	$6,813.71
26/03/24	291198	Synergy	Electricity charges from 23/01/24 to 19/03/24	$230.35	$7,044.06
26/03/24	291247	Synergy	Electricity charges from 23/01/24 to 19/03/24	$2,006.21	$9,050.27
28/05/24	298476	Synergy	Electricity charges from 20/03/24 to 22/05/24	$337.94	$9,388.21
28/05/24	298485	Synergy	Electricity charges from 20/03/24 to 22/05/24	$2,375.57	$11,763.78
26/07/24	305581	Synergy	Electricity charges from 23/05/24 to 23/07/24	$2,304.05	$14,067.83
30/07/24	MSB020924		Electricity Rebate 23 May -23 Jul24	$350.00	$14,417.83
31/07/24	306158	Synergy	Electricity charges from 23/05/24 to 23/07/24	$564.50	$14,982.33
			Total Electricity*	**$14,982.33**	

Fire Protection

13/12/23			Opening balance	$890.00	$890.00

Richardson Strata Management Services
138 Burswood Road
Burswood WA 6100
Telephone: 9472 1833
Facsimile: 9355 5299

Income and Expenditure

Financial Period
01/09/2023 - 31/08/2024

33257
7-11 Heirisson Way VICTORIA PARK

08/01/24	282765	Hecs Fire	Attend to comple Bi-Annual Inspection of Fire Doors - 08/01/24	$420.00	$1,310.00
13/02/24	286515	Hecs Fire	Bi-Annual Testing of Emergency Exit Lighting - 31/01/24	$280.00	$1,590.00
30/05/24	298790	Hecs Fire	Annual thermographics test - 02/04/24	$1,650.00	$3,240.00
30/05/24	298791	Hecs Fire	1 x Replace Emergency Fitting with Stanilte Eco Wall Emergency and 1 x Replace Exit Fitting - 30/05/24	$580.00	$3,820.00
05/06/24	299729	Hecs Fire	Service & inspect fire hose reel, fire hydrants, ABE dry chemical fire extinuisher parts fitted and anti tamper seals - 04/06/24	$652.00	$4,472.00
18/06/24	301084	Hecs Fire	Bi-Annual inspection of fire doors & associated hardware - 07/06/24	$420.00	$4,892.00
20/06/24	301594	Hecs Fire	Annual residual flow test & fire brigade booster connection - 30/05/24	$810.00	$5,702.00
24/06/24	301835	Hecs Fire	Attend site for spot for potential fire risk - 20/06/24	$260.00	$5,962.00
02/07/24	303154	Hecs Fire	Supplied & install fire door do not obstruct signs - 28/06/24	$110.00	$6,072.00
20/08/24	308414	Hecs Fire	Fire equipment supplied - Fire Extinguisher Cabinets,Hose Reel and Hose Reel Overhaul - 16/08/24	$3,138.00	$9,210.00
27/08/24	309214	Hecs Fire	Attend and conduct Bi-Annual testing of emergency exit lighting - 06/08/24	$280.00	$9,490.00
			Total Fire Protection	**$9,490.00**	

General Repairs

13/12/23			Opening balance	$4,026.61	$4,026.61
12/01/24	283165	Make Safe WA	U101 - Rebed loose pavers to stairwell leading - 12/01/24	$220.00	$4,246.61
19/01/24	283885	Landgate	Lodgement - Change of Address - 18/01/24	$203.00	$4,449.61
09/02/24	287116	Bunnings Trade	Assorted items from Bunnings - 31/01	$228.31	$4,677.92
12/02/24	286442	Guv'nor Locksmiths	Supplied and installed a new gate spring for the pedestrian gate - 12/02/24	$243.18	$4,921.10
16/02/24	287103	Make Safe WA	Relay pavers in several areas of complex - 16/02/24	$310.00	$5,231.10
21/02/24	287668	Lock Stock & Farrell Locksmith	Supply & deliver 6 x larsens coined key cut - 19/02/24	$154.11	$5,385.21
05/03/24	289110	Guv'nor Locksmiths	WAS key for electrical cabinet - 05/03/24	$486.36	$5,871.57
07/03/24	289444	Bunnings Trade	Supply fertilizers, weedmat, key tag taskmaster, anti bird net etc - Feb 24	$100.37	$5,971.94
13/03/24	290003	Antenna Masters	Investigated loss of TV service - 05/03/24	$832.20	$6,804.14
02/05/24	295942	Make Safe WA	U501 replace x4 cracked roof tiles - 02/05/24	$360.00	$7,164.14
09/05/24	296613	Bunnings Trade	Lift cleaning and card holder - 30/04/24	$101.56	$7,265.70
20/05/24	297724	Make Safe WA	Supply and install new sand & relay existing pavers - 20/05/24	$320.00	$7,585.70
06/06/24	299974	Bunnings Trade	Purchase of Moisture absorber damp free, Globe LED luce - 31/05/24	$32.36	$7,618.06
06/06/24	299974	Bunnings Trade	Interest charge	$0.11	$7,618.17
20/06/24	301611	All Marketing	Aerial footage gutters - 20/06/24	$450.00	$8,068.17
24/06/24	301781	Lock Stock & Farrell Locksmith	Gy Key - Larsens OZX coined key - 24/06/24	$131.38	$8,199.55
24/06/24	301801	Guv'nor Locksmiths	Service call to cutting keys - 24/06/24	$68.18	$8,267.73
04/07/24	303649	Bunnings Trade	Cleaner glass & lubricant - 05/06/24	$27.58	$8,295.31
15/07/24	304343	Antenna Masters	U121 Investigate loss of TV service to the complex. Inspected the antenna and measured incoming signal levels - 09/07/24	$354.90	$8,650.21

Richardson Strata Management Services
138 Burswood Road
Burswood WA 6100
Telephone: 9472 1833
Facsimile: 9355 5299

Income and Expenditure

Financial Period
01/09/2023 - 31/08/2024

33257
7-11 Heirisson Way VICTORIA PARK

22/07/24	305158	Make Safe WA	U 202 & U 220 ceiling to gain access to roof, Clean out box gutter and outlet, water clean area & clean up debris - 20/07/24	$480.00	$9,130.21
25/07/24	305535	Make Safe WA	U 101 Investigate water damaged bedroom ceiling & U 201 Clean out box gutter and outlet, water clean area - 25/07/24	$300.00	$9,430.21
29/07/24	305870	Insulmate Roofing Specialists	Leak Inspection & Repair - 26/07/24	$90.00	$9,520.21
31/07/24	306371	Make Safe WA	U 207 & 220 Water damaged ceilings - 31/07/24	$1,360.00	$10,880.21
06/08/24	307309	Waterseal Waterproofing Pty Ltd	Moisture ingress testing & report - 06/08/24	$440.00	$11,320.21
08/08/24	307452	Precise Building Solutions	Supply and install additional fixings to the battens - 08/08/24	$628.00	$11,948.21
21/08/24	308576	Make Safe WA	U 505 water damage to ceiling - 20/08/24	$280.00	$12,228.21
28/08/24	309335	Make Safe WA	Unit 507 Repair water damage ceiling - 27/08/24	$330.00	$12,558.21
			Total General Repairs	**$12,558.21**	

Gym Equipment

09/01/24	282901	Orbit Health & Fitness Solutions	Gym equipment maintenance - 04/01/24	$315.00	$315.00
			Total Gym Equipment	**$315.00**	

Income Tax

13/12/23			Opening balance	$500.00	$500.00
26/04/24	294835	Australian Tax Office	Income Tax 2023	$2,424.30	$2,924.30
17/07/24	304919	Australian Tax Office	PAYG - Apr 24 to Jun 24	$715.00	$3,639.30
			Total Income Tax	**$3,639.30**	

Insurance - Annual Management Fee

01/03/24	288720	Richardson Strata Management	Insurance Annual Management fee	$4,500.00	$4,500.00
			Total Insurance - Annual Management Fee	**$4,500.00**	

Key Register

28/12/23	281718	Richardson Strata Management	8x months - Key register	$33.33	$33.33
			Total Key Register	**$33.33**	

Lawns & Gardens

13/12/23			Opening balance	$1,610.16	$1,610.16
16/01/24	283632	Peter Frusher	Garden maintenance - 10/01/24 & 11/01/24	$480.00	$2,090.16
17/01/24	283691	Grants Residential Services	Weedkiller - 31/12/23	$94.00	$2,184.16
13/02/24	286579	A-1 Reticulation Pty Ltd	Repair pipe work, nstall joiners & replace blocked nossels - 04/12/23	$286.25	$2,470.41
18/03/24	290448	Jewell Reticulation	Repaired broken PVC fitting - 17/0224	$247.00	$2,717.41
20/03/24	290700	Peter Frusher	Garden maintenance - 7/02/24, 27/02/24 & 19/03/24	$600.00	$3,317.41
30/04/24	295177	A-1 Reticulation Pty Ltd	Supply rain bird solonoid valve, slip fix & solvent - 25/04/24	$316.00	$3,633.41
07/05/24	296461	Peter Frusher	Garden maintenance - 10/04/24 & 22/04/24	$300.00	$3,933.41
23/05/24	297975	Peter Frusher	Garden maintenance - 21/05/24 & 22/05/24	$300.00	$4,233.41

Richardson Strata Management Services
138 Burswood Road
Burswood WA 6100
Telephone: 9472 1833
Facsimile: 9355 5299

33257
7-11 Heirisson Way VICTORIA PARK

27/06/24	302189	Peter Frusher	Garden maintenance - 07/06/24, 12/06/24 & 17/06/24	$360.00	$4,593.41
01/08/24	306851	Grants Residential Services	Weed killer 5L - 31/07/24	$79.00	$4,672.41
			Total Lawns & Gardens	**$4,672.41**	

Lift Contract

13/12/23			Opening balance	$6,090.36	$6,090.36
01/04/24	289003	Schindler Lifts Australia Pty Ltd	Lift Digital Services Maintenance - 01/04/24 to 30/06/24	$176.65	$6,267.01
01/04/24	289004	Schindler Lifts Australia Pty Ltd	Lift Maintenance - 01/04/24 to 30/06/24	$2,965.88	$9,232.89
01/07/24	299021	Schindler Lifts Australia Pty Ltd	Lift digital services maintenance - 01/07/24 to 30/09/24	$177.70	$9,410.59
01/07/24	299024	Schindler Lifts Australia Pty Ltd	Lift maintenance - 01/07/24 to 30/09/24	$2,983.67	$12,394.26
21/08/24	308548	Schindler Lifts Australia Pty Ltd	Lift 1 Passenger lift Unit stuck level 4 door closed after power outage - 02/08/24	$655.00	$13,049.26
			Total Lift Contract	**$13,049.26**	

Management Fees - Non Standard

28/12/23	281718	Richardson Strata Management	Set up costs	$300.00	$300.00
28/12/23	281718	Richardson Strata Management	1x Strata Plan	$40.00	$340.00
17/01/24	283598	Richardson Strata Management	Work orders/Quotes f/n 12.01.24	$10.00	$350.00
31/01/24	284932	Richardson Strata Management	Flyers f/n 26.01.24	$60.00	$410.00
31/01/24	284932	Richardson Strata Management	Work orders/Quotes f/n 26.01.24	$170.00	$580.00
15/02/24	286893	Richardson Strata Management	S/Plan	$40.00	$620.00
15/02/24	286893	Richardson Strata Management	Work orders/Quotes f/n 09.02.24	$70.00	$690.00
15/02/24	286893	Richardson Strata Management	Breaches f/n 09.02.24	$30.00	$720.00
29/02/24	288277	Richardson Strata Management	Work orders/Quotes f/n 23.02.24	$20.00	$740.00
13/03/24	289984	Richardson Strata Management	Work orders/Quotes f/n 08.03.24	$30.00	$770.00
12/04/24	293302	Richardson Strata Management	Work orders/Quotes f/n 05.04.24	$10.00	$780.00
24/04/24	294621	Richardson Strata Management	Work orders/Quotes f/n 19.04.24	$20.00	$800.00
17/05/24	297498	Richardson Strata Management	Work orders/Quotes f/n 03.05.24	$10.00	$810.00
24/05/24	298220	Richardson Strata Management	Work orders/Quotes f/n 17.05.24	$50.00	$860.00
24/05/24	298220	Richardson Strata Management	A/H Pager 15.05.24 - no water	$50.00	$910.00
04/06/24	299404	Richardson Strata Management	Work orders/Quotes f/n 31.05.24	$30.00	$940.00
20/06/24	301473	Richardson Strata Management	Work orders/Quotes f/n 14.06.24	$20.00	$960.00
04/07/24	303564	Richardson Strata Management	Work orders/Quotes f/n 28.06.24	$20.00	$980.00
17/07/24	304767	Richardson Strata Management	Work orders / Quotes f/n 12.07.24	$50.00	$1,030.00
31/07/24	306321	Richardson Strata Management	Work orders / Quotes f/n 26.07.24	$70.00	$1,100.00
21/08/24	308832	Richardson Strata Management	Work orders / Quotes f/n 09.08.24	$30.00	$1,130.00
29/08/24	309640	Richardson Strata Management	Breaches f/n 23.08.24	$30.00	$1,160.00
29/08/24	309640	Richardson Strata Management	Work orders / Quotes f/n 23.08.24	$40.00	$1,200.00
			Total Management Fees - Non Standard	**$1,200.00**	

Management Fees - Standard

13/12/23			Opening balance	$4,749.98	$4,749.98
28/12/23	281718	Richardson Strata Management		$1,475.00	$6,224.98
17/01/24	283598	Richardson Strata Management		$1,475.00	$7,699.98
15/02/24	286893	Richardson Strata Management		$1,475.00	$9,174.98
13/03/24	289984	Richardson Strata Management		$1,475.00	$10,649.98
18/04/24	294020	Richardson Strata Management		$1,475.00	$12,124.98
17/05/24	297498	Richardson Strata Management		$1,475.00	$13,599.98

Richardson Strata Management Services
138 Burswood Road
Burswood WA 6100
Telephone: 9472 1833
Facsimile: 9355 5299

Income and Expenditure

Financial Period
01/09/2023 - 31/08/2024

33257
7-11 Heirisson Way VICTORIA PARK

18/06/24	301047	Richardson Strata Management		$1,475.00	$15,074.98
16/07/24	304507	Richardson Strata Management		$1,475.00	$16,549.98
21/08/24	308832	Richardson Strata Management		$1,475.00	$18,024.98
			Total Management Fees - Standard	**$18,024.98**	

Meeting Fee

31/01/24	284932	Richardson Strata Management	AGM 18.01.24 - 2hrs	$374.00	$374.00
15/02/24	286893	Richardson Strata Management	Meeting 05.02.24 - 1hr	$120.00	$494.00
			Total Meeting Fee	**$494.00**	

Pest Control*

13/12/23			Opening balance	$800.00	$800.00
18/01/24	283725	Budget Pest Control	Rodent Baiting - 17/01/24	$600.00	$1,400.00
			Total Pest Control*	**$1,400.00**	

Plumbing & Drainage

13/12/23			Opening balance	$250.00	$250.00
24/01/24	284186	Steineck Plumbing	Leak Detection, Moisture testing, Thermal Imaging - 22/01/24	$602.50	$852.50
13/02/24	286530	Steineck Plumbing	Pressure to domestic mains & condition report on water service - 13/02/24	$290.00	$1,142.50
30/05/24	298871	Shenton Enterprises	Stormwater service - 13/05/24	$900.00	$2,042.50
06/06/24	300055	Casotti Plumbers Commercial & Domestic	U122 Leaking shower, isolated water, grabbed tools and rectify the issue - 20/05/24	$288.95	$2,331.45
21/08/24	308619	Property Plumbing & Gas	Urgent tap repairs - 16/08/24	$126.36	$2,457.81
			Total Plumbing & Drainage	**$2,457.81**	

Pool Service

13/12/23			Opening balance	$1,173.86	$1,173.86
18/01/24	283803	Shenton Enterprises	Pool service, chemicals & consumables - Dec 23	$297.13	$1,470.99
18/01/24	283832	Shenton Enterprises	Pool service, consumables & chemicals - 27/11/24	$329.41	$1,800.40
05/02/24	285916	Shenton Enterprises	Pool service, consumables & chemicals - Jan 24	$640.44	$2,440.84
25/03/24	291132	Shenton Enterprises	Pool Service & Consumables - Feb 24	$365.13	$2,805.97
28/03/24	291662	Shenton Enterprises	TTS reg pool service - Mar 24	$377.25	$3,183.22
30/04/24	295202	Shenton Enterprises	Regular pool service - Apr 24	$419.36	$3,602.58
04/06/24	299687	Shenton Enterprises	Regular pool service - May 24	$473.03	$4,075.61
05/06/24	299732	Town of Victoria Park	Aquatic Facility Testing - 2023-2024	$909.09	$4,984.70
25/06/24	301982	Shenton Enterprises	Regular pool service - Jun 24	$290.97	$5,275.67
30/07/24	305986	Shenton Enterprises	TTS reg pool service - Jul 24	$440.61	$5,716.28
30/07/24	305995	Town of Victoria Park	Aquatic Facility Pool/Spa Sampling - 2024 - 25	$1,000.00	$6,716.28
27/08/24	309166	Shenton Enterprises	TTS reg pool service - Aug 24	$312.41	$7,028.69
			Total Pool Service	**$7,028.69**	

Portal Access

28/12/23	281718	Richardson Strata Management	8x months - Portal	$200.00	$200.00
			Total Portal Access	**$200.00**	

Richardson Strata Management Services
138 Burswood Road
Burswood WA 6100
Telephone: 9472 1833
Facsimile: 9355 5299

Income and Expenditure

Financial Period
01/09/2023 - 31/08/2024

33257
7-11 Heirisson Way VICTORIA PARK

Postage & Petties

02/01/24	281866	Richardson Strata Management	Bing Post	$8.59	$8.59
31/01/24	284932	Richardson Strata Management	B&W Copies Jan24	$25.20	$33.79
31/01/24	284932	Richardson Strata Management	Colour Copies Jan24	$48.00	$81.79
31/01/24	284932	Richardson Strata Management	Postage Jan24	$15.27	$97.06
31/01/24	284932	Richardson Strata Management	Postage Jan24	$1.09	$98.15
01/02/24	285450	Richardson Strata Management	Bing post	$8.49	$106.64
15/02/24	286893	Richardson Strata Management	Postage	$2.18	$108.82
29/02/24	288277	Richardson Strata Management	Postage	$1.09	$109.91
29/02/24	288277	Richardson Strata Management	B&W Copies Feb24	$0.60	$110.51
01/03/24	288784	Richardson Strata Management	Bing Post	$1.50	$112.01
15/04/24	293597	Richardson Strata Management	Bing Post	$10.37	$122.38
29/04/24	294950	Richardson Strata Management	B&W Copies Apr24	$1.80	$124.18
18/06/24	301047	Richardson Strata Management	Postage May24	$1.09	$125.27
01/07/24	302612	Richardson Strata Management	Bing post	$8.42	$133.69
26/07/24	305770	Richardson Strata Management	B&W Copies Jul24	$4.80	$138.49
29/08/24	309640	Richardson Strata Management	B&W Copies Aug24	$0.90	$139.39
			Total Postage & Petties	**$139.39**	

Premiums

13/12/23			Opening balance	$309.37	$309.37
23/02/24	287708	Lync Insurance Brokers Pty Ltd	Premiums - 25/02/24 to 25/02/25	$77,131.99	$77,441.36
23/02/24	287708	Lync Insurance Brokers Pty Ltd	Stamp duty - 25/02/24 to 25/02/25	$8,427.81	$85,869.17
28/03/24	33257 Premium refund	Lync Insurance Brokers Pty Ltd	Deposit: 33257 REFUND PSC NETW	-$29,999.07	$55,870.10
			Total Premiums	**$55,870.10**	

Pumps

13/12/23			Opening balance	$1,037.85	$1,037.85
21/03/24	290813	One-Multi Pty Ltd	Pump service - 21/03/24	$990.00	$2,027.85
26/06/24	302098	One-Multi Pty Ltd	Complete operational testing for the diesel generator - 26/06/24	$1,720.00	$3,747.85
			Total Pumps	**$3,747.85**	

Security Gates

22/12/23	281547	Bullant Security Pty Ltd	Electric gate lock inspection & replacement - 22/12/23	$579.73	$579.73
05/04/24	292690	ABA Automatic Gates	Gate maintenance & replaced battery - 03/04/24	$589.13	$1,168.86
20/06/24	301588	ABA Automatic Gates	Programmed 5x 2B Airkey remotes to both gates - 19/06/24	$507.50	$1,676.36
10/07/24	304071	ABA Automatic Gates	Gate repairs & replace motor battery - 09/07/24	$396.40	$2,072.76
11/07/24	304128	Make Safe WA	Entrance gate repair - 10/07/24	$150.00	$2,222.76
28/08/24	309350	ABA Automatic Gates	U309 Removed airkey from both gates - 22/08/24	$171.82	$2,394.58
			Total Security Gates	**$2,394.58**	

Status Certificate Fees Paid

Richardson Strata Management Services
138 Burswood Road
Burswood WA 6100
Telephone: 9472 1833
Facsimile: 9355 5299

Income and Expenditure

Financial Period
01/09/2023 - 31/08/2024

33257
7-11 Heirisson Way VICTORIA PARK

13/12/23			Opening balance	$1,960.00	$1,960.00
28/12/23	281718	Richardson Strata Management	Section 110 (1) Lot 31	$140.00	$2,100.00
28/12/23	281718	Richardson Strata Management	Section 110 (2) Lot 31	$140.00	$2,240.00
03/01/24	282383	Richardson Strata Management	Lot 26 - funds from Acton Belle	$140.00	$2,380.00
03/01/24	282383	Richardson Strata Management	Lot 26 - funds from Acton Belle	$140.00	$2,520.00
22/01/24	312173	Richardson Strata Management	Sect 110 (1) Lot 53	$140.00	$2,660.00
22/01/24	312173	Richardson Strata Management	Sect 110 (2) Lot 53	$140.00	$2,800.00
21/03/24	290933	Richardson Strata Management	Section 110 (1) Lot 30	$140.00	$2,940.00
21/03/24	290933	Richardson Strata Management	Section 110 (2) Lot 30	$140.00	$3,080.00
17/05/24	297498	Richardson Strata Management	Section 110 (1) Lot 39	$140.00	$3,220.00
17/05/24	297498	Richardson Strata Management	Section 110 (2) Lot 39	$140.00	$3,360.00
10/06/24	300180	Richardson Strata Management	Section 110 (1) Lot 50	$140.00	$3,500.00
10/06/24	300180	Richardson Strata Management	Section 110 (2) Lot 50	$140.00	$3,640.00
			Total Status Certificate Fees Paid	**$3,640.00**	

Telephone / Internet Line

13/12/23			Opening balance	$144.11	$144.11
19/12/23	281485	Telstra 7773	Telephone charges up to 09/12/23	$45.45	$189.56
19/02/24	287127	Telstra 7773	Telephone charges up to 09/01/24	$45.45	$235.01
19/02/24	287128	Telstra 7773	Telephone charges up to 09/02/24	$45.45	$280.46
18/03/24	290538	Telstra 7773	Telephone charges up to 09/03/24	$45.45	$325.91
18/04/24	293983	Telstra 7773	Telephone charges up to 09/04/24	$45.45	$371.36
20/05/24	297701	Telstra 7773	Telephone charges up to 09/05/24	$45.45	$416.81
18/06/24	301078	Telstra 7773	Telephone charges to 09/06/24	$45.45	$462.26
18/07/24	304978	Telstra 7773	Telephone charges to 09/07/24	$45.45	$507.71
20/08/24	308409	Telstra 7773	Teleohone charges to 09/08/24	$45.45	$553.16
			Total Telephone / Internet Line	**$553.16**	

Valuation

15/02/24	286893	Richardson Strata Management	Insurance Valuation	$60.00	$60.00
27/02/24	287941	QIA Group	Initial Insurance Valuation Report - 27/02/24	$697.77	$757.77
			Total Valuation	**$757.77**	

Water Consumption*

13/12/23			Opening balance	$3,239.30	$3,239.30
22/02/24	287631	Water Corporation	Water Consumption charges from 12/09/23 to 16/11/23	$4,414.39	$7,653.69
22/02/24	287631	Water Corporation	Water Consumption charges from 16/11/23 to 18/01/24	$3,990.89	$11,644.58
27/03/24	291343	Water Corporation	Water Consumption charges from 19/01/24 to 19/03/24	$4,881.92	$16,526.50
20/05/24	297646	Water Corporation	Water Consumption charges from 20/03/24 to 16/05/24	$3,868.17	$20,394.67
23/07/24	305379	Water Corporation	Water Consumption charges from 17/05/24 to 18/07/24	$2,932.96	$23,327.63
			Total Water Consumption*	**$23,327.63**	

WHS Report

13/03/24	289808	QIA Group	Initial Common Property Safety Report - 13/03/24	$616.64	$616.64

Richardson Strata Management Services
138 Burswood Road
Burswood WA 6100
Telephone: 9472 1833
Facsimile: 9355 5299

33257
7-11 Heirisson Way VICTORIA PARK

13/03/24	312339	Richardson Strata Management	WHS Report - Admin Fee as per contract	$300.00	$916.64
			Total WHS Report	**$916.64**	
			Total Administrative Expenses	**$245,391.38**	

RESERVE FUND OTHER INCOME

Date	Ref.	Payee	Details	Amt.	Bal.
Interest On Bank Deposits					
13/12/23			Opening balance	$485.41	$485.41
			Total Interest On Bank Deposits	**$485.41**	
Interest On Levy Arrears					
13/12/23			Opening balance	$110.45	$110.45
18/03/24	lot 28		lot 28-BPay Payment: DEFT Bpay 0000017898	$2.00	$112.45
19/03/24	lot 25		lot 25-BPay Payment: DEFT Bpay 0000017895	$2.66	$115.11
21/03/24	lot 29		lot 29-DEFT I/Tfr: DEFT I/CCd AX 000001789	$2.34	$117.45
22/04/24	lot 18		lot 18-DEFT I/CCd: DEFT I/Tfr 0000017888	$2.24	$119.69
23/04/24	lot 44		lot 44-BPay Payment: DEFT Bpay 0000017914	$4.19	$123.88
26/04/24	lot 8		lot 8-DEFT I/Tfr: DEFT I/CCd VI 000001787	$2.69	$126.57
17/05/24	lot 6		lot 6-BPay Payment: DEFT Bpay 0000017876	$5.07	$131.64
17/05/24	lot 56		lot 56-BPay Payment: DEFT Bpay 0000017926	$1.97	$133.61
20/05/24	lot 22		lot 22-BPay Payment: DEFT Bpay 0000017892	$5.93	$139.54
11/06/24	lot 17		lot 17-BPay Payment: DEFT Bpay 0000017887	$0.92	$140.46
19/06/24	lot 54		lot 54-BPay Payment: DEFT Bpay 0000017924	$8.40	$148.86
20/06/24	lot 52		lot 52-BPay Payment: DEFT Bpay 0000017922	$4.07	$152.93
21/06/24	lot 24		lot 24-BPay Payment: DEFT Bpay 0000017894	$4.26	$157.19
21/06/24	lot 8		lot 8-DEFT I/Tfr: DEFT I/CCd VI 000001787	$3.66	$160.85
28/06/24	lot 25		lot 25-BPay Payment: DEFT Bpay 0000017895	$4.84	$165.69
28/06/24	lot 48		lot 48-BPay Payment: DEFT Bpay 0000017918	$8.34	$174.03
28/06/24	lot 48		lot 48-BPay Payment: DEFT Bpay 0000017918	$5.02	$179.05
01/08/24	lot 29		lot 29-BPay Payment: DEFT Bpay 0000017899	$3.52	$182.57
30/08/24			Adjust clearing	-$1.07	$181.50
			Total Interest On Levy Arrears	**$181.50**	
Levy Balancing Clearing Account					
30/08/24			Adjust clearing	$1.07	$1.07
31/08/24			Balancing journal	-$1.07	$0.00
			Total Levy Balancing Clearing Account	**$0.00**	
Special Levy					
30/08/24			Special levy to reserve	$31,000.05	$31,000.05
			Total Special Levy	**$31,000.05**	
			Total Reserve Other Income	**$31,666.96**	

Richardson Strata Management Services
138 Burswood Road
Burswood WA 6100
Telephone: 9472 1833
Facsimile: 9355 5299

Income and Expenditure

Financial Period
01/09/2023 - 31/08/2024

33257
7-11 Heirisson Way VICTORIA PARK

RESERVE FUND EXPENSES

Date	Ref.	Payee	Details	Amt.	Bal.
Waterproofing					
29/05/24	298690	Elitedelean Waterproofing Pty Ltd	Waterproofing works for basement - 29/05/24	$9,750.00	$9,750.00
10/06/24	300311	Elitedelean Waterproofing Pty Ltd	Remove and install negative waterproofing code - 07/06/24	$22,750.00	$32,500.00
			Total Waterproofing	**$32,500.00**	
			Total Reserve Expenses	**$32,500.00**	

SPECIAL LEVY - SHORTFALL FUND OTHER INCOME

Date	Ref.	Payee	Details	Amt.	Bal.
Interest On Levy Arrears					
18/03/24	lot 39		lot 39-BPay Payment: DEFT Bpay 0000017909	$7.12	$7.12
18/03/24	lot 28		lot 28-BPay Payment: DEFT Bpay 0000017898	$8.16	$15.28
19/03/24	lot 25		lot 25-BPay Payment: DEFT Bpay 0000017895	$4.34	$19.62
21/03/24	lot 29		lot 29-DEFT I/Tfr: DEFT I/CCd AX 000001789	$7.25	$26.87
28/03/24	lot 57		lot 57-BPay Payment: DEFT Bpay 0000017927	$19.80	$46.67
04/04/24	lot 52		lot 52-BPay Payment: DEFT Bpay 0000017922	$10.36	$57.03
22/04/24	lot 18		lot 18-DEFT I/CCd: DEFT I/Tfr 0000017888	$6.94	$63.97
23/04/24	lot 44		lot 44-BPay Payment: DEFT Bpay 0000017914	$12.98	$76.95
26/04/24	lot 8		lot 8-DEFT I/Tfr: DEFT I/CCd VI 000001787	$9.80	$86.75
17/05/24	lot 6		lot 6-BPay Payment: DEFT Bpay 0000017876	$16.81	$103.56
17/05/24	lot 56		lot 56-BPay Payment: DEFT Bpay 0000017926	$6.12	$109.68
20/05/24	lot 22		lot 22-BPay Payment: DEFT Bpay 0000017892	$18.37	$128.05
28/06/24	lot 48		lot 48-BPay Payment: DEFT Bpay 0000017918	$25.86	$153.91
			Total Interest On Levy Arrears	**$153.91**	
Special Levy					
30/08/24			Special levy to reserve	-$31,000.05	-$31,000.05
			Total Special Levy	**-$31,000.05**	
			Total Special Levy - Shortfall Other Income	**-$30,846.14**	

Richardson Strata Management Services

138 Burswood Road
Burswood WA 6100

Telephone: 9472 1833
Facsimile: 9355 5299

Levy Positions

Financial Period
01/09/2023 - 31/08/2024

33257
7-11 Heirisson Way VICTORIA PARK

Lot	Unit	UOE	Opening Balance	Admin Levy	Reserve Levy	Other Levy	Charges	Total	Discount	Paid	Closing Balance	Interest Paid
1	101	152	0.00	3,302.40	635.70	518.30	76.90	4,533.30	0.00	4,533.30	0.00	0.00
2	102	152	0.00	3,302.40	635.70	518.30	0.00	4,456.40	0.00	4,456.40	0.00	0.00
3	103	158	0.00	3,432.75	660.75	538.80	0.00	4,632.30	0.00	4,632.30	0.00	0.00
4	105	156	1,149.75 cr	3,389.25	652.40	531.95	0.00	3,423.85	0.00	3,423.85	0.00	0.00
5	106	156	0.00	3,389.25	652.40	531.95	151.80	4,725.40	0.00	4,725.40	0.00	0.00
6	107	156	1,247.11	3,389.25	652.40	531.95	198.00	6,018.71	0.00	6,535.71	517.00 cr	39.29
7	108	156	0.00	3,389.25	652.40	531.95	225.90	4,799.50	0.00	4,799.50	0.00	0.00
8	109	141	687.92	3,063.40	589.65	480.80	66.00	4,887.77	0.00	5,176.83	289.06 cr	23.17
9	110	156	0.00	3,389.25	652.40	531.95	0.00	4,573.60	0.00	4,573.60	0.00	0.00
10	111	139	0.00	3,019.95	581.35	474.00	176.90	4,252.20	0.00	4,252.20	0.00	0.00
11	112	139	0.00	3,019.95	581.35	474.00	0.00	4,075.30	0.00	4,075.30	0.00	0.00
12	113	156	0.00	3,389.25	652.40	531.95	0.00	4,573.60	0.00	4,573.60	0.00	0.00
13	115	141	0.00	3,063.40	589.65	480.80	0.00	4,133.85	0.00	4,133.85	0.00	0.00
14	116	156	1,435.80 cr	3,389.25	652.40	531.95	0.00	3,137.80	0.00	3,137.80	0.00	0.00
15	117	156	0.00	3,389.25	652.40	531.95	0.00	4,573.60	0.00	4,573.60	0.00	0.00
16	118	156	0.00	3,389.25	652.40	531.95	0.00	4,573.60	0.00	4,573.60	0.00	0.00
17	119	156	1,192.28 cr	3,389.25	652.40	531.95	0.00	3,381.32	0.00	3,429.08	47.76 cr	0.92
18	120	157	535.40	3,411.00	656.55	535.35	0.00	5,138.30	0.00	5,138.30	0.00	21.94
19	121	152	0.00	3,302.40	635.70	518.30	0.00	4,456.40	0.00	4,456.40	0.00	0.00
20	201	159	542.20	3,454.45	664.95	542.20	0.00	5,203.80	0.00	5,203.80	0.00	0.00
21	202	159	0.00	3,454.45	664.95	542.20	0.00	4,661.60	0.00	4,661.60	0.00	0.00
22	203	164	561.96	3,563.10	685.85	559.25	318.00	5,688.16	0.00	4,269.73	1,418.43	58.08
23	205	164	0.00	3,563.10	685.85	559.25	25.90	4,834.10	0.00	4,834.10	0.00	0.00
24	206	164	0.00	3,563.10	685.85	559.25	33.00	4,841.20	0.00	4,841.20	0.00	22.51
25	207	164	3,267.81	3,563.10	685.85	559.25	232.00	8,308.01	0.00	6,885.83	1,422.18	50.58
26	208	164	0.00	3,563.10	685.85	559.25	0.00	4,808.20	0.00	4,808.20	0.00	0.00
27	209	146	0.00	3,172.05	610.55	497.85	25.90	4,306.35	0.00	4,306.35	0.00	0.00
28	210	162	2,940.35	3,519.60	677.45	552.40	33.00	7,722.80	0.00	7,722.80	0.00	22.11
29	211	144	491.05	3,128.55	602.25	491.05	66.00	4,778.90	0.00	4,778.90	0.00	43.55
30	212	169	0.00	3,671.70	706.75	576.30	43.00	4,997.75	0.00	4,997.75	0.00	0.00
31	213	169	0.00	3,671.70	706.75	576.30	0.00	4,954.75	0.00	4,954.75	0.00	0.00
32	215	144	0.00	3,128.55	602.25	491.05	0.00	4,221.85	0.00	4,221.85	0.00	0.00
33	216	162	0.00	3,519.60	677.45	552.40	0.00	4,749.45	0.00	4,749.45	0.00	0.00
34	217	146	0.00	3,172.05	610.55	497.85	0.00	4,280.45	0.00	4,280.45	0.00	0.00
35	218	164	0.00	3,563.10	685.85	559.25	0.00	4,808.20	0.00	4,808.20	0.00	0.00
36	219	164	40.06 cr	3,563.10	685.85	559.25	0.00	4,768.14	0.00	4,768.14	0.00	0.00
37	220	164	0.00	3,563.10	685.85	559.25	0.00	4,808.20	0.00	4,808.20	0.00	0.00
38	221	164	0.00	3,563.10	685.85	559.25	0.00	4,808.20	0.00	4,808.20	0.00	0.00
39	222	165	562.65	3,584.75	690.00	562.65	33.00	5,433.05	0.00	5,433.05	0.00	7.12
40	223	159	1,171.85 cr	3,454.40	664.95	542.20	0.00	3,489.70	0.00	3,489.70	0.00	0.00
41	301	173	0.00	3,758.60	723.45	589.95	0.00	5,072.00	0.00	5,072.00	0.00	0.00
42	302	154	0.00	3,345.80	644.05	525.15	0.00	4,515.00	0.00	4,515.00	0.00	0.00
43	303	170	0.00	3,693.40	710.90	579.70	0.00	4,984.00	0.00	4,984.00	0.00	0.00
44	305	154	3,077.50	3,345.80	644.05	525.15	198.00	7,790.50	0.00	6,351.03	1,439.47	41.03

Report Date: 20th September 2024

Richardson Strata Management Services
138 Burswood Road
Burswood WA 6100
Telephone: 9472 1833
Facsimile: 9355 5299

Attachment 6

Levy Positions

Financial Period
01/09/2023 - 31/08/2024

33257
7-11 Heirisson Way VICTORIA PARK

Lot	Unit	UOE	Opening Balance	Admin Levy	Reserve Levy	Other Levy	Charges	Total	Discount	Paid	Closing Balance	Interest Paid
45	306	175	0.00	3,802.00	731.85	596.75	125.90	5,256.50	0.00	5,256.50	0.00	0.00
46	307	175	1,289.75 cr	3,802.00	731.85	596.75	0.00	3,840.85	0.00	3,840.85	0.00	0.00
47	308	154	0.00	3,345.80	644.05	525.15	0.00	4,515.00	0.00	4,515.00	0.00	0.00
48	309	170	216.06	3,693.40	710.90	579.70	318.00	5,518.06	0.00	5,518.06	0.00	111.17
49	310	154	1,135.00 cr	3,345.80	644.05	525.15	25.90	3,405.90	0.00	3,405.90	0.00	0.00
50	311	173	0.00	3,758.60	723.45	589.95	0.00	5,072.00	0.00	5,072.00	0.00	0.00
51	402	178	0.00	3,867.20	744.40	607.00	0.00	5,218.60	0.00	5,218.60	0.00	0.00
52	401	160	0.00	3,476.10	669.10	545.60	66.00	4,756.80	0.00	3,375.05	1,381.75	32.32
53	403	184	0.00	3,997.55	769.50	627.45	0.00	5,394.50	0.00	5,394.50	0.00	0.00
54	405	337	0.00	7,321.65	1,409.35	1,149.15	33.00	9,913.15	0.00	9,913.15	0.00	46.26
55	407	178	0.00	3,867.20	744.40	607.00	0.00	5,218.60	0.00	5,218.60	0.00	0.00
56	501	186	825.00	4,041.00	777.85	634.25	0.00	6,278.10	0.00	6,278.10	0.00	19.34
57	503	344	1,173.05	7,473.70	1,438.60	1,173.05	33.00	11,291.40	0.00	11,291.40	0.00	19.80
58	505	344	0.00	7,473.70	1,438.60	1,173.05	0.00	10,085.35	0.00	10,085.35	0.00	0.00
59	507	186	634.30	4,041.00	777.85	634.25	0.00	6,087.40	0.00	4,481.10	1,606.30	0.00
x	122	0	0.00	0.00	0.00	0.00	0.00	0.00	0.00	0.00	0.00	0.00
		10000	**9,347.87**	**217,260.20**	**41,820.15**	**34,100.05**	**2,505.10**	**305,033.37**	**0.00**	**298,619.06**	**6,414.31**	**559.19**

	Admin	Reserve	Total
Levies in Arrears	6,004.36	1,263.77	7,268.13
Levies Paid in Advance	853.82 cr	0.00	853.82 cr

Report Date: 20th September 2024