LANDGATE COPY OF ORIGINAL NOT TO SCALE 29/08/2025 12:06 PM Request number: 68687691
www.landgate.wa.gov.au

STRATA/~~SURVEY-STRATA~~ PLAN 33257

SHEET 1 OF 8 SHEETS

MANAGEMENT STATEMENT ☐ YES ☒ NO

Lodged 20.8.97 170803
Examined 20.8.97 VTH
Registered 20.8.97 APP. G560414

REGISTRAR OF TITLES

WESTERN AUSTRALIAN PLANNING COMMISSION

Certificate of Approval of W.A.P.C. under Section 25(1) or 25B(2) of *Strata Tiles*

FOR CHAIRMAN ..... DATE .....

PLAN OF
LOT 829 OF SWAN LOCATION 36
ON PLAN 21200

CERT. OF TITLE
VOLUME: 2063 FOLIO: 326

LOCAL GOVERMENT
TOWN OF VICTORIA PARK

INDEX PLAN
PERTH 1000 29.45

FIELD BOOK NUMBER

SCALE **1: 500, 1: 750**

NAME OF SCHEME
BURSWOOD GARDENS

ADDRESS OF PARCEL
7- 11 HEIRISSON WAY
VICTORIA PARK
WA 6100

DOLA
Department of LAND ADMINISTRATION

THE RIGHT TO MINES OF COAL OR OTHER MINERALS BEING EXCLUDED FROM PORTION OF THE WITHIN LAND

LOCATION PLAN

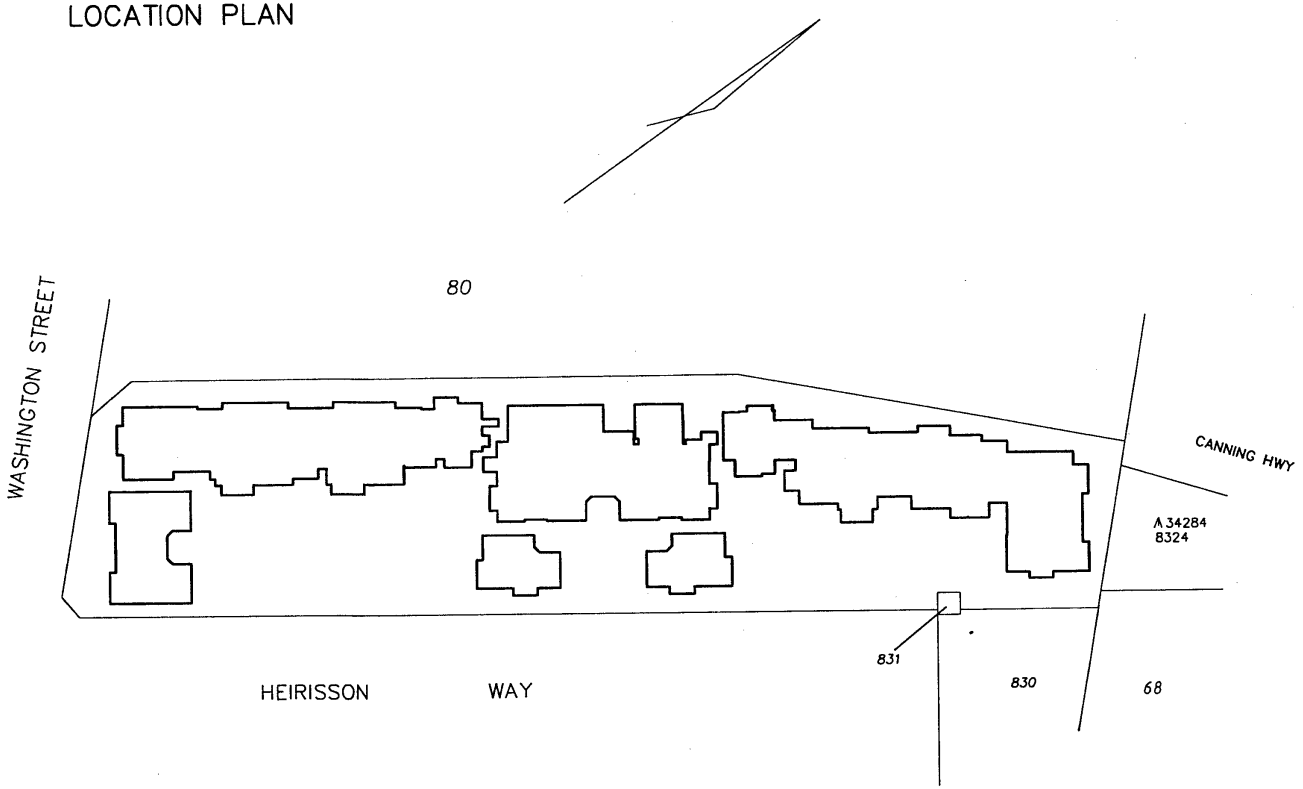

SCALE: 1: 750

HELD BY LANDGATE IN DIGITAL FORM ONLY.

STRATA PLAN 33257

WARNING: CREASING OR FOLDING WILL LEAD TO REJECTION

LANDGATE COPY OF ORIGINAL NOT TO SCALE 29/08/2025 12:06 PM Request number: 68687691
www.landgate.wa.gov.au
Landgate

STRATA/~~SURVEY-STRATA~~ PLAN 33257

SHEET 2 OF 8 SHEETS

BASEMENT

REFER TO ENLARGEMENT ON SHEET 3 OF 8

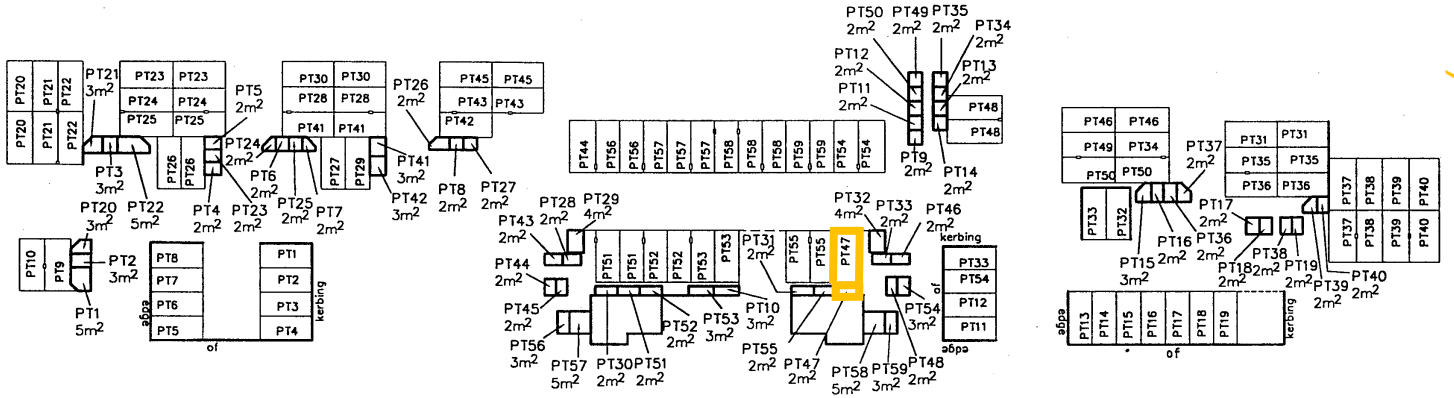

WHERE 2 LOTS HAVE A COMMON OR PARTY WALL OR HAVE BUILDINGS ON THEM WHICH ARE JOINED, THE CENTRE PLANE OF THAT WALL OR THE PLANE AT WHICH THEY ARE JOINED IS THE BOUNDARY.

CAR SPACES EXTEND TO A HEIGHT OF 2.5 METRES ABOVE THE UPPER SURFACE OF THEIR RESPECTIVE FLOOR EXCEPT WHERE COVERED.

THE BOUNDARIES OF THE LOTS OR PART OF THE LOTS WHICH ARE BUILDINGS SHOWN ON THE STRATA PLAN ARE THE EXTERNAL SURFACES OF THOSE BUILDINGS, UNLESS NOTED OTHERWISE

THE HORIZONTAL BOUNDARIES OF THE BUILDING PART LOTS ARE THE UPPER SURFACE OF THE FLOOR AND THE UNDER SURFACE OF THE CEILING

SCALE: 1: 500

WARNING: CREASING OR FOLDING WILL LEAD TO REJECTION

Attachment 1 (1 of 3)

Cor 52 | 1997 Vol 4 p 8

Attachment 1 (2 of 3)

Cor 52/1997 Vol 4 Fol 8

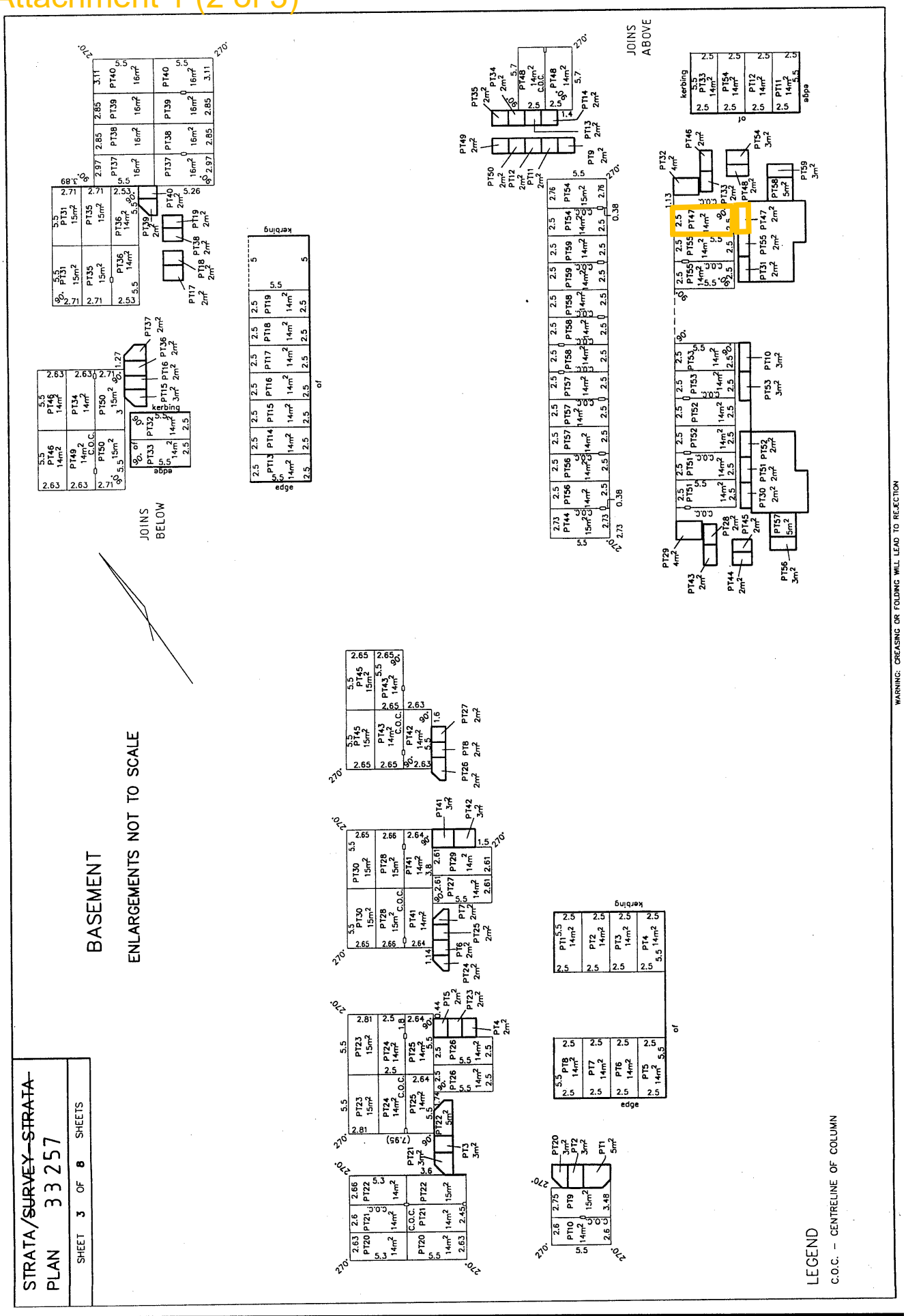

LANDGATE COPY OF ORIGINAL NOT TO SCALE 29/08/2025 12:06 PM Request number: 68687691

Landgate
www.landgate.wa.gov.au

LANDGATE COPY OF ORIGINAL NOT TO SCALE 29/08/2025 12:06 PM Request number: 68687691
www.landgate.wa.gov.au
Landgate

STRATA/~~SURVEY-STRATA~~ PLAN 33257

SHEET 4 OF 8 SHEETS

GROUND FLOOR

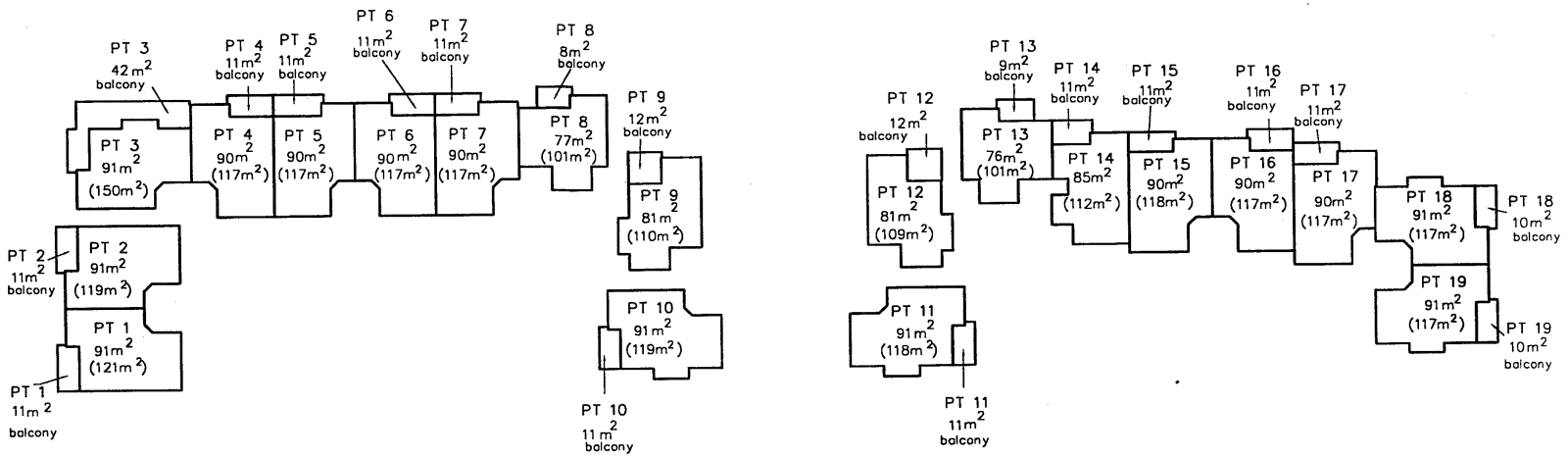

WHERE 2 LOTS HAVE A COMMON OR PARTY WALL OR HAVE BUILDINGS ON THEM WHICH ARE JOINED, THE CENTRE PLANE OF THAT WALL OR THE PLANE AT WHICH THEY ARE JOINED IS THE BOUNDARY.

THE BOUNDARIES OF THE LOTS OR PART OF THE LOTS WHICH ARE BUILDINGS SHOWN ON THE STRATA PLAN ARE THE EXTERNAL SURFACES OF THOSE BUILDINGS, UNLESS NOTED OTHERWISE

THE HORIZONTAL BOUNDARIES OF THE BUILDING PART LOTS ARE THE UPPER SURFACE OF THE FLOOR AND THE UNDER SURFACE OF THE CEILING

BALCONIES EXTEND TO A HEIGHT OF 2.5 METRES ABOVE THE UPPER SURFACE OF THEIR RESPECTIVE FLOORS EXCEPT WHERE COVERED

SCALE: 1: 500

WARNING: CREASING OR FOLDING WILL LEAD TO REJECTION

Col 52/1997 Vol 4 p 8

LANDGATE COPY OF ORIGINAL NOT TO SCALE 29/08/2025 12:06 PM Request number: 68687691
www.landgate.wa.gov.au
Landgate

STRATA/~~SURVEY-STRATA~~
PLAN 33257
SHEET 5 OF 8 SHEETS

FIRST FLOOR

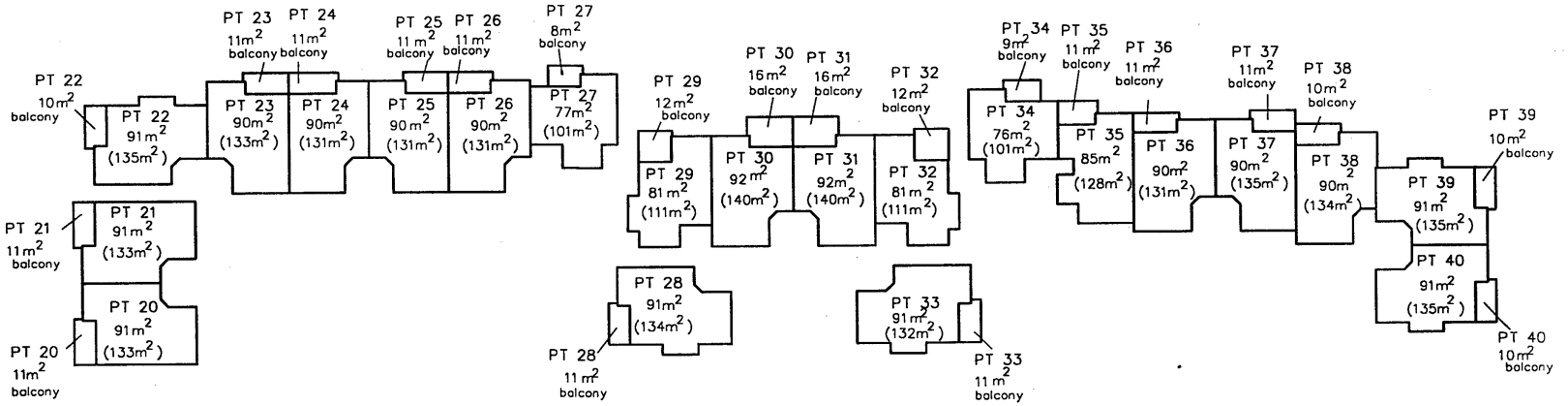

WHERE 2 LOTS HAVE A COMMON OR PARTY WALL OR HAVE BUILDINGS ON THEM WHICH ARE JOINED, THE CENTRE PLANE OF THAT WALL OR THE PLANE AT WHICH THEY ARE JOINED IS THE BOUNDARY.

THE BOUNDARIES OF THE LOTS OR PART OF THE LOTS WHICH ARE BUILDINGS SHOWN ON THE STRATA PLAN ARE THE EXTERNAL SURFACES OF THOSE BUILDINGS, UNLESS NOTED OTHERWISE

THE HORIZONTAL BOUNDARIES OF THE BUILDING PART LOTS ARE THE UPPER SURFACE OF THE FLOOR AND THE UNDER SURFACE OF THE CEILING

BALCONIES EXTEND TO A HEIGHT OF 2.5 METRES ABOVE THE UPPER SURFACE OF THEIR RESPECTIVE FLOORS EXCEPT WHERE COVERED

SCALE: 1: 500

WARNING: CREASING OR FOLDING WILL LEAD TO REJECTION

cor 52/1997 Vol 4 p 8

LANDGATE COPY OF ORIGINAL NOT TO SCALE 29/08/2025 12:06 PM Request number: 68687691
www.landgate.wa.gov.au

Attachment 1 (3 of 3)

Cor 52 | 1997 Vol 4 p 8

STRATA/~~SURVEY-STRATA~~
PLAN 33257
SHEET 6 OF 8 SHEETS

SECOND FLOOR

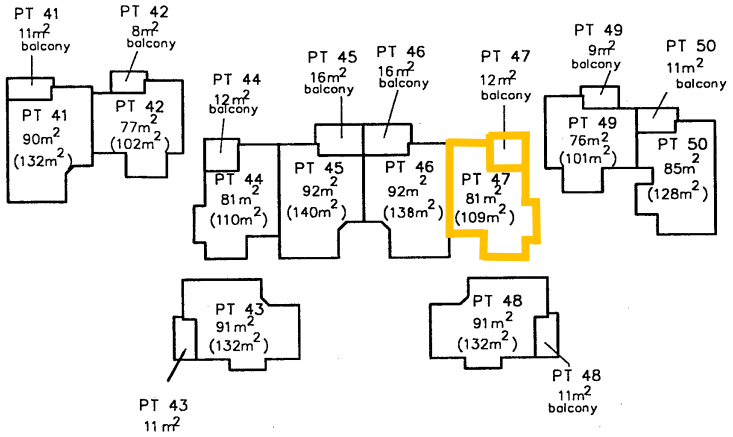

WHERE 2 LOTS HAVE A COMMON OR PARTY WALL OR HAVE BUILDINGS ON THEM WHICH ARE JOINED, THE CENTRE PLANE OF THAT WALL OR THE PLANE AT WHICH THEY ARE JOINED IS THE BOUNDARY.

THE BOUNDARIES OF THE LOTS OR PART OF THE LOTS WHICH ARE BUILDINGS SHOWN ON THE STRATA PLAN ARE THE EXTERNAL SURFACES OF THOSE BUILDINGS, UNLESS NOTED OTHERWISE

THE HORIZONTAL BOUNDARIES OF THE BUILDING PART LOTS ARE THE UPPER SURFACE OF THE FLOOR AND THE UNDER SURFACE OF THE CEILING

BALCONIES EXTEND TO A HEIGHT OF 2.5 METRES ABOVE THE UPPER SURFACE OF THEIR RESPECTIVE FLOORS EXCEPT WHERE COVERED

SCALE: 1: 500

WARNING: CREASING OR FOLDING WILL LEAD TO REJECTION

LANDGATE COPY OF ORIGINAL NOT TO SCALE 29/08/2025 12:06 PM Request number: 68687691
www.landgate.wa.gov.au

STRATA/~~SURVEY-STRATA~~
PLAN 33257

SHEET 7 OF 8 SHEETS

THIRD FLOOR

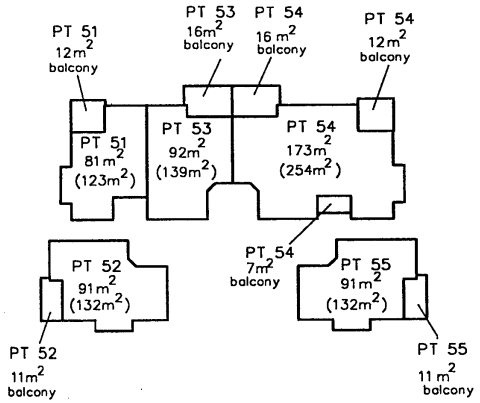

WHERE 2 LOTS HAVE A COMMON OR PARTY WALL OR HAVE BUILDINGS ON THEM WHICH ARE JOINED, THE CENTRE PLANE OF THAT WALL OR THE PLANE AT WHICH THEY ARE JOINED IS THE BOUNDARY.

THE BOUNDARIES OF THE LOTS OR PART OF THE LOTS WHICH ARE BUILDINGS SHOWN ON THE STRATA PLAN ARE THE EXTERNAL SURFACES OF THOSE BUILDINGS, UNLESS NOTED OTHERWISE

THE HORIZONTAL BOUNDARIES OF THE BUILDING **PART LOTS ARE THE UPPER** SURFACE OF THE FLOOR AND THE UNDER SURFACE OF THE CEILING

BALCONIES EXTEND TO A HEIGHT OF 2.5 METRES ABOVE THE UPPER SURFACE OF THEIR RESPECTIVE FLOORS EXCEPT WHERE COVERED

SCALE: 1: 500

WARNING: CREASING OR FOLDING WILL LEAD TO REJECTION

Col 52/1997 Vol 4 f 8

LANDGATE COPY OF ORIGINAL NOT TO SCALE 29/08/2025 12:06 PM Request number: 68687691
www.landgate.wa.gov.au

STRATA/~~SURVEY-STRATA~~ PLAN 33257
SHEET 8 OF 8 SHEETS

COR 52/1997 Vol 4 P8

FOURTH FLOOR

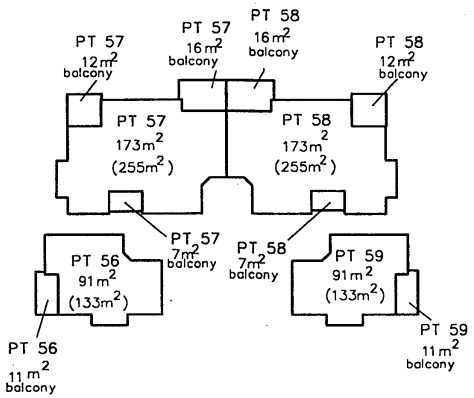

WHERE 2 LOTS HAVE A COMMON OR PARTY WALL OR HAVE BUILDINGS ON THEM WHICH ARE JOINED, THE CENTRE PLANE OF THAT WALL OR THE PLANE AT WHICH THEY ARE JOINED IS THE BOUNDARY.

THE BOUNDARIES OF THE LOTS OR PART OF THE LOTS WHICH ARE BUILDINGS SHOWN ON THE STRATA PLAN ARE THE EXTERNAL SURFACES OF THOSE BUILDINGS, UNLESS NOTED OTHERWISE

THE HORIZONTAL BOUNDARIES OF THE BUILDING PART LOTS ARE THE UPPER SURFACE OF THE FLOOR AND THE UNDER SURFACE OF THE CEILING

BALCONIES EXTEND TO A HEIGHT OF 2.5 METRES ABOVE THE UPPER SURFACE OF THEIR RESPECTIVE FLOORS EXCEPT WHERE COVERED

SCALE: 1: 500

WARNING: CREASING OR FOLDING WILL LEAD TO REJECTION

ANNEXURE 'A'

FORM 3

STRATA / ~~SURVEY STRATA~~ PLAN NO. 33257					
Schedule of Unit Entitlement		OFFICE USE ONLY Current Cs of Title	Schedule of Unit Entitlement		OFFICE USE ONLY Current Cs of Title
Lot No	Unit Entitlement	Vol. Folio.	Lot No	Unit Entitlement	Vol. Folio.
1	152	2112-601	18	157	2112-618
2	152	2112-602	19	152	2112-619
3	158	2112-603	20	159	2112-620
4	156	2112-604	21	159	2112-621
5	156	2112-605	22	164	2112-622
6	156	2112-606	23	164	2112-623
7	156	2112-607	24	164	2112-624
8	141	2112-608	25	164	2112-625
9	156	2112-609	26	164	2112-626
10	139	2112-610	27	146	2112-627
11	139	2112-611	28	162	2112-628
12	156	2112-612	29	144	2112-629
13	141	2112-613	30	169	2112-630
14	156	2112-614	31	169	2112-631
15	156	2112-615	32	144	2112-632
16	156	2112-616	33	162	2112-633
17	156	2112-617	34	146	2112-634
Aggregate			Aggregate		

DESCRIPTION OF PARCEL AND BUILDING/PARCEL

59 residential units in a multi-storey complex of brick and tile construction situated on Lot 829 of Swan Location 36 on Plan 21200 and having an address of 7 - 11 Heirisson Way Victoria Park WA 6100.

CERTIFICATE OF LICENSED VALUER
STRATA/SURVEY STRATA

I, Antonio Bonavita, being a Licensed Valuer licensed under the Land Valuers Licensing Act 1978 certify that the unit entitlement of each Lot (in this certificate, excluding any common property lots), as stated in the schedule bears in relation to the aggregate unit entitlement of all lots delineated on the plan a proportion not greater than 5 per cent more or 5 per cent less than the proportion that the value (as that term is defined in section 14 (2a) of the Strata Titles Act 1985) of that lot bears to the aggregate value of all the lots delineated on the plan.

26th June 1997
Date

Signed

LANDGATE COPY OF ORIGINAL NOT TO SCALE 29/08/2025 12:06 PM Request number: 68687691

Landgate
www.landgate.wa.gov.au

Attachment 2

ANNEXURE 'B'

FORM 3

STRATA / ~~SURVEY STRATA~~ PLAN NO. 33257

Schedule of Unit Entitlement		OFFICE USE ONLY Current Cs of Title		Schedule of Unit Entitlement		OFFICE USE ONLY Current Cs of Title	
Lot No	Unit Entitlement	Vol.	Folio.	Lot No	Unit Entitlement	Vol.	Folio.
35	164	2112 - 635		52	160	2112 - 652	
36	164	2112 - 636		53	184	2112 - 653	
37	164	2112 - 637		54	337	2112 - 654	
38	164	2112 - 638		55	178	2112 - 655	
39	165	2112 - 639		56	186	2112 - 656	
40	159	2112 - 640		57	344	2112 - 657	
41	173	2112 - 641		58	344	2112 - 658	
42	154	2112 - 642		59	186	2112 - 659	
43	170	2112 - 643					
44	154	2112 - 644					
45	175	2112 - 645					
46	175	2112 - 646					
47	154	2112 - 647					
48	170	2112 - 648					
49	154	2112 - 649					
50	173	2112 - 650					
51	178	2112 - 651					
Aggregate				Aggregate	10000		

DESCRIPTION OF PARCEL AND BUILDING/PARCEL

59 residential units in a multi-storey complex of brick and tile construction situated on Lot 829 of Swan Location 36 on Plan 21200 and having an address of 7 - 11 Heirisson Way Victoria Park WA 6100.

CERTIFICATE OF LICENSED VALUER
STRATA/SURVEY STRATA

I, Antonio Bonavita, being a Licensed Valuer licensed under the Land Valuers Licensing Act 1978 certify that the unit entitlement of each Lot (in this certificate, excluding any common property lots), as stated in the schedule bears in relation to the aggregate unit entitlement of all lots delineated on the plan a proportion not greater than 5 per cent more or 5 per cent less than the proportion that the value (as that term is defined in section 14 (2a) of the Strata Titles Act 1985) of that lot bears to the aggregate value of all the lots delineated on the plan.

26th June 1997
Date

Signed

LANDGATE COPY OF ORIGINAL NOT TO SCALE 29/08/2025 12:06 PM Request number: 68687691

Landgate
www.landgate.wa.gov.au

FORM 5

Strata Titles Act 1985
Sections 5B (1), 8A, 22 (1)

STRATA PLAN No. 33257

DESCRIPTION OF PARCEL & BUILDING

59 residential units in a multi-storey complex of brick and tile construction situated on Lot 829 of Swan Location 36 on Plan 21200 and having an address of 7-11 Heirisson Way Victoria Park WA 6100.

CERTIFICATE OF SURVEYOR

I, Hoot Khoon Teoh being a licensed surveyor registered under the *Licensed Surveyors Act 1909* certify that in respect of the strata plan which relates to the parcel and building described above (in this certificate called "the plan"):-

(a) each lot that is not wholly within a building shown on the plan is within the external surface boundaries of the parcel; and either

(b) each building shown on the plan is within the external surface boundaries of the parcel; or

(c) ~~in a case where a part of a wall or building, or material attached to a wall or building, encroaches beyond the external surface boundaries of the parcel -~~

(i) ~~all lots shown on the plan are within the external surface boundaries of the parcel;~~

(ii) ~~the plan clearly indicates the existence of the encroachment and its nature and extent; and~~

(iii) ~~where the encroachment is not on to a public road, street or way, that an appropriate easement has been granted and will be lodged with the Registrar of Titles to enable it to be registered as an appurtenance of the parcel; and~~

*(d) ~~if the plan is a plan of re-subdivision, it complies with Schedule 1 by-laws(s) no(s) ..... on Strata Plan no ..... registered in respect of (name of scheme) or sufficiently complies with that/those by-law(s) in a way that is allowed by regulation 36 of the *Strata Titles General Regulations 1996*.~~

11/8/97
Date

Licensed Surveyor

* Delete if inapplicable

LANDGATE COPY OF ORIGINAL NOT TO SCALE 29/08/2025 12:06 PM Request number: 68687691

Landgate
www.landgate.wa.gov.au

FORM 7

STRATA PLAN No. 33257

DESCRIPTION OF PARCEL & BUILDING

59 residential units in a multi-storey complex of brick and tile construction situated on Lot 829 of Swan Location 36 on Plan 21200 and having an address of 7-11 Heirisson Way Victoria Park WA 6100.

CERTIFICATE OF LOCAL GOVERNMENT

Town Of Victoria Park, the local government hereby certifies that in respect of the strata plan which relates to the parcel and building described above (in this certificate called "the plan"):-

(1) (a) the building and the parcel shown on the plan have been inspected and that it is consistent with the approved building plans and specifications in respect of the building; or

~~(b) the building has been inspected and the modification is consistent with the approved building plans and specifications relating to the modification;~~

(2) the building, in the opinion of the local government, is of sufficient standard to be brought under the Strata Titles Act 1985;

~~(3) where a part of a wall or building or material attached to a wall or building~~ encroaches beyond the external surface boundaries of the parcel on to a public road, ~~street or way~~ the local government is of the opinion that retention of the encroachment in ~~its existing~~ state will not endanger public safety or unreasonably interfere with the amenity of ~~the~~ neighbourhood ~~and the local government does not object to the encroachment; and~~

(4) (a) any conditions imposed by the Western Australian Planning Commission have been complied with; or

~~(b) the within strata scheme is exempt from the requirement of approval by the Western Australian Planning Commission.~~

18 August 1994
Date

Shire / Town Clerk
DELEGATED OFFICER
SECTION 23(5)
STRATA TITLES ACT 1985

Delete if inapplicable

LANDGATE COPY OF ORIGINAL NOT TO SCALE 29/08/2025 12:06 PM Request number: 68687691
Landgate
www.landgate.wa.gov.au

FORM 26

WAPC Ref 911/97. STRATA PLAN NO. 33257

Strata Titles Act 1985
Sections 25 (1), 25 (4)

CERTIFICATE OF GRANT OF APPROVAL BY WESTERN AUSTRALIAN PLANNING COMMISSION TO STRATA PLAN

It is hereby certified that the approval of the Western Australian Planning Commission has been granted pursuant to section 25(1) of the *Strata Titles Act 1985* to -

*(i) the *Strata Plan/plan of re-subdivision/plan of consolidation submitted on 2 August 1997 and relating to the property described below;

*(ii) the sketch submitted on ..... of the proposed *subdivision of ~~the property~~ described below into lots on a ~~Strata Plan/re-~~subdivision/consolidation of the lots on the ~~Strata~~ Plan specified below, subject to the following conditions -

Property Description: Lot (or Strata Plan) No. : 829

Location: Swan Loc. 36

Locality: Victoria Park

Local Government: Town Of Victoria Park

Lodged by: TUSCOM & ASSOCIATES PTY LTD

.....

Date: .....

.....

For Chairman, Western Australian Planning Commission

14 AUG 1997

.....

Date

(*To be deleted as appropriate)

LANDGATE COPY OF ORIGINAL NOT TO SCALE 29/08/2025 12:06 PM Request number: 68687691

Landgate
www.landgate.wa.gov.au

LANDGATE COPY OF ORIGINAL NOT TO SCALE 29/08/2025 12:06 PM Request number: 68687691
www.landgate.wa.gov.au

FORM 8

ANNEXURE.....C.....STRATA / ~~SURVEY - STRATA~~ PLAN NO.....33257 REGISTRAR OF TITLES

SCHEDULE OF DEALINGS ON STRATA/~~SURVEY - STRATA~~ PLAN

Dealings registered or recorded on Strata/~~Survey - Strata~~ Plan	Instrument				Signature of Registrar of Titles
	Nature	Number	Regist'd	Time	
SEE RECORD OF STRATA TITLES SCHEME FOR FURTHER ENDORSEMENTS					

Note: Entries may be affected by subsequent endorsements.

LANDGATE COPY OF ORIGINAL NOT TO SCALE 29/08/2025 12:06 PM Request number: 68687691
www.landgate.wa.gov.au

ANNEXURE.....D.....STRATA / ~~SURVEY - STRATA~~ PLAN NO.....33257 REGISTRAR OF TITLES

SCHEDULE OF ENCUMBRANCES ETC.

Instrument		Particulars	Regist'd	Signature of Registrar of Titles	Cancellation				
Nature	Number				Nature	Number	Regist'd	Time	Signature of Registrar of Titles
		SEE RECORD OF STRATA TITLES SCHEME FOR FURTHER ENDORSEMENTS							

Note: Entries may be affected by subsequent endorsements.

LANDGATE COPY OF ORIGINAL NOT TO SCALE 29/08/2025 12:06 PM Request number: 68687691
www.landgate.wa.gov.au

GOVERNMENT OF WESTERN AUSTRALIA

Landgate

Record of Strata Titles Scheme
Limitations, Interests, Encumbrances and Notifications

Approved Form 2020-27588
Version 3 – 1/07/2020

OFFICE USE ONLY
ANNEXURE C
STRATA PLAN 33257

BGRoberts
REGISTRAR OF TITLES

Document			Cancellation		
Number	Particulars	Date recorded/ lodged/registered	Nature	Number	Registered
P869151	SCHEME NOTICE	29.01.2024			
P910674	SCHEME BY-LAWS	7.3.2024			